CONGO®
SWING SETS

# SWING'N MONKEY SERIES

2 AND 3 POSITION SWING'N MONKEY MODELS

Rev. 05.08.13

# *Please Read! Very Important!*

If you are missing parts or have questions regarding the installation of your Monkey Playsystem do not contact the retailer. Call us directly at the factory.
Our technical support department will be happy to assist you.


## CONGO PLAY, LLC

1272 Old Alpharetta Road
Alpharetta, GA. 30005
Tel: 877-494-3875 ET or 909-522-4874 PT
Monday - Friday 8:00 am-3:00 pm


---

## *Installation Tips:*

1. Assembly of your playsystem will take 4 hours depending on your level of experience. Assembly will require an adult helper.
2. Empty each box and organize the boards alphabetically. When you are finished organizing the boards complete an inventory to be certain that you have received all of the parts.
3. Sort all of the hardware in a large box or container. This will reduce the chance of losing small parts.
4. Pay close attention to the length and diameter of bolts and screws. There are different sizes in the same bag that look alike. To correctly identify hardware, match it up to the "actual size" drawings located in the hardware identification section
5. Gather all of the tools listed in the "tool list" section before you start
6. Read all of the instructions thoroughly. This enclosure cannot be installed using only the illustrations.
7. Complete each step before moving on to the next. Jumping ahead in the instruction manual can be unsafe and create extra work.
8. Retain this manual for future reference. Keep it in a safe place where you can refer to it as needed.

---

## *Tool List*

Carpenter Square

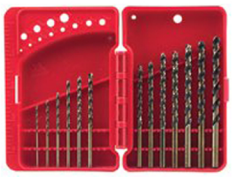

Drill Bit Set

Drill Attachment
1/2" & 9/16" Nutdriver
#2 Phillip Bit, #30 Star Bit

Power Drill

Socket Set

Rubber Mallet

Leveler

Safety Glasses

Wrenches

Clamps

Srew Driver
#2 Phillips

Tape Measure

Ladder

## General Information

***Manufacturer:***
Congo Play, LLC
1272 Old Alpharetta Road
Alpharetta, GA. 30005
Tel: 877-494-3876

***Unit Type:***
Unit Name: Congo Swing'n Monkey Series
Model: 2 Position and 3 Position Model

**MAXIMUM FALL HEIGHT: 6'-2"**

**THIS PRODUCT IS INTENDED FOR USE BY CHILDREN FROM AGES 3 TO 10**

**NOT INTENDED FOR PUBLIC OR COMMERCIAL USE. NONRESIDENTIAL OR COMMERCIAL USE WILL VOID THE WARRANTY**

**CHILDREN MUST NOT USE THE PLAYSYSTEM UNTILL IT IS COMPLETLEY ASSEMBLED, PROPERLEY INSTALLED AND INSTRUCTED ON SAFE OPERATION.**

The entire manual should be read before beginning the assembly process. This will minimize installation problems and safety issues.

---

## Operating Instructions

**Observing the following statements and warnings reduces the likelihood of serious or fatal injury.**

1. This playsystem is designed for the use of 3 occupants who have a combined weight not exceeding 250 lbs.
2. On-site adult supervision is required for children of all ages.
3. Instruct children not to walk close to, in front of, behind, or between moving items.
4. Instruct children not to twist swing chains or ropes or loop them over the top of the support bar. This may reduce the strength of the chain or rope.
5. Instruct children to avoid swinging empty seats.
6. Teach children to sit in the center of the swings with their full weight on the seat. Never stand on a swing.
7. Instruct children not to use the equipment in a manner other than intended.
8. Instruct children not to get off equipment while it is in motion.
9. Dress children appropriately (examples would include the use of well-fitting shoes and the avoidance of ponchos, scarfs, and other loose-fitting clothing that is potentially hazardous while using equipment).
10. Instruct children not to climb when the equipment is wet.
11. Verify that suspended climbing ropes, chain, or cable are secured a both ends.
12. Verify that suspended climbing ropes, chain, or cable cannot be looped back on itself.
13. Instruct children not to attach items to the playground equipment that are not specifically designed for use with the equipment, such as, but not limited to, jump ropes, clothesline, pet leashes, cables and chain as they may cause a strangulation hazard.
14. Instruct children to always go down slides feet first. Never go down a slide headfirst.
15. Instruct children to look before going down a slide to ensure that the slide is clear.
16. Instruct children to never run up slides.

## Installation Tips

1. Assembly of your playsystem will take up to 8 hours depending on your level of experience. Assembly will require an adult helper.
2. Empty each box and organize the boards. When you are finished organizing the boards complete an inventory to be certain that you have received all of the parts.
3. Sort all of the hardware in a large box or container. This will reduce the chance of losing small parts.
4. Pay close attention to the length and diameter of bolts and screws.
5. Gather all of the tools listed in the "tool list" section before you start.
6. Read all of the instructions thoroughly. This playsystem cannot be installed using only the illustrations.
7. Complete each step before moving on to the next. Jumping ahead in the instruction manual can be unsafe and create extra work.
8. Retain this manual for future reference. Keep it in a safe place where you can refer to it as needed.

---

## Maintenance Instructions

1. Check all nuts and bolts twice monthly during the usage season for tightness and tighten as required. It is particularly important that this procedure be followed at the beginning of each season.
2. Remove plastic swing seats and take indoors or do not use when the temperature drops below 40F.
3. Oil all metallic moving parts monthly during the usage period.
4. Check all coverings for bolts and sharp edges twice monthly during usage season to be certain they are in place. Replace when necessary. It is especially important to do this at the beginning of each new season.
5. Check swing seats, ropes, cables, and chains monthly during usage season for evidence of deterioration. Replacement should be made if deterioration or damage is found.
6. Sand rusted areas on tubular members and repaint using a nonlead-based paint meeting the requirements of Title 16 CFR Part 1303.

---

## Disposal Instructions

1. Disassemble and dispose of the playsystem in such a way that no unreasonable hazards will exist at the time of disposal.

# Consumer Information Sheet for Playground Surfacing Materials

The U.S. Consumer Product Safety Commission (CPSC) estimates that about 100,000 playground equipment-related injuries resulting from falls to the ground surface are treated annually in U.S.hospital emergency rooms. Injuries involving this hazard pattern tend to be among the most serious of all playground injuries, and have the potential to be fatal, particularly when the injury is to the head.

The surface under and around playground equipment can be a major factor in determining the injury causing potential of a fall. It is self evident that a fall onto a shock absorbing surface is less likely to cause a serious injury than a fall onto a hard surface. Playground equipment should never be placed on hard surfaces such as concrete or asphalt and while grass may appear to be acceptable it may quickly turn to hard packed earth in areas of high traffic. Shredded bark mulch, wood chips, fine sand or fine gravel are considered to be acceptable shock absorbing surfaces when installed and maintained at a sufficient depth under and around playground equipment.

The following table lists the maximum height from which a child would not be expected to sustain a life-threatening head injury in a fall onto four different loose-fill surfacing materials if they are installed and maintained at depths of 6, 9 and 12 inches. However, it should be recognized that all injuries due to falls cannot be prevented no matter what surfacing material is used.

**Fall height in feet from which a life threatening head injury would not be expected:**

| *TYPE OF MATERIAL* | *6" depth* | *9" depth* | *12" depth* |
|---|---|---|---|
| Double Shredded Bark Mulch | 6' | 10' | 11' |
| Wood Chips | 6' | 7' | 12' |
| Fine Sand | 5' | 5' | 9' |
| Fine Gravel | 6' | 7' | 10' |

Rubber mulch installed at a depth of 4 inches, will protect from a 5 - 6 feet fall height.

It is recommended that a shock absorbing material should extend a minimum of 6 feet in all directions from the perimeter of stationary equipment such as climbers and slides. However, because children may deliberately jump from a moving swing, the shock absorbing material should extend in the front and rear of a swing a minimum distance of 2 times the height of the pivot point measured from a point directly beneath the pivot on the supporting structure.

This information is intended to assist in comparing the relative shock-absorbing properties of various materials. No particular material is recommended over another. However, each material is only effective when properly maintained. Materials should be checked periodically and replenished to maintain correct depth as determined necessary for your equipment. The choice of a material depends on the type and height of the playground equipment, the availability of the material in your area, and its cost.

This information has been extracted from CPSC publications "Playground Surfacing - Technical InformationGuide" and "Handbook for Public Playground Safety." Copies of these reports can be obtained by sending a post card to the: Office of Public Affairs, U.S. Consumer Product Safety Commission, Washington, D.C. 20207 or call the toll-free hotline: 1-800-638-2772.

# PARTS IDENTIFICATION

## ACCESSORIES

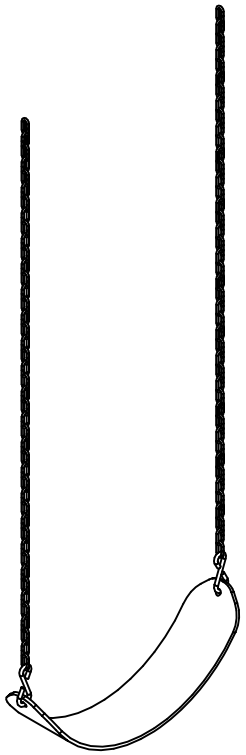

SWING SEAT AND CHAIN (2)

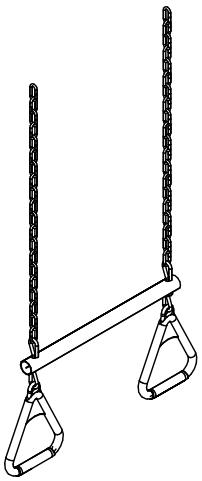

TRAPEZE (1)
** 3 POSITION ONLY **

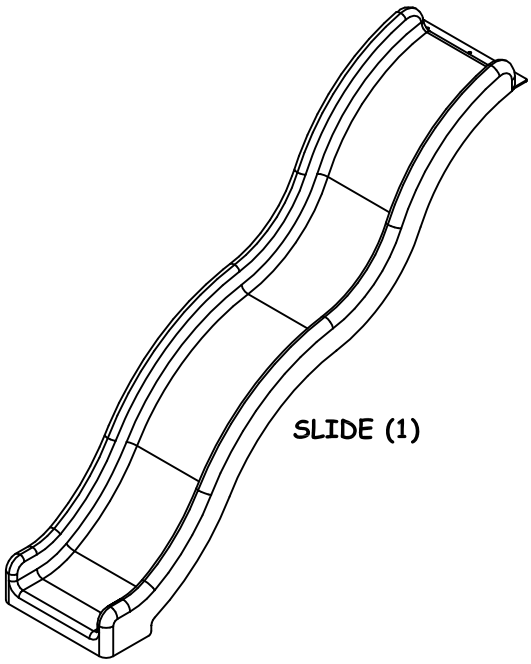

SLIDE (1)

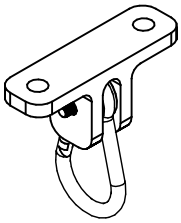

(2 POSITION) SWING HANGER (4)
(3 POSITION) SWING HANGER (6)

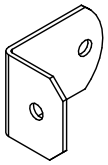

L - BRACKET (1)

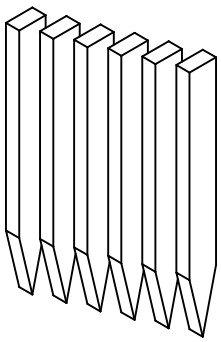

WOOD STAKE (6)

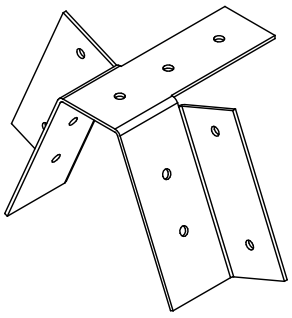

A-FRAME BRACKET (2)

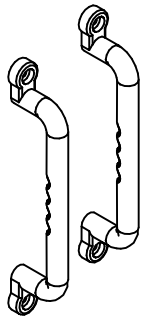

HAND GRIP (1Pr.)

# PARTS IDENTIFICATION

WOOD COMPONENTS

| ID LETTER | DESCRIPTION | QUANTITY |
|---|---|---|
| A | 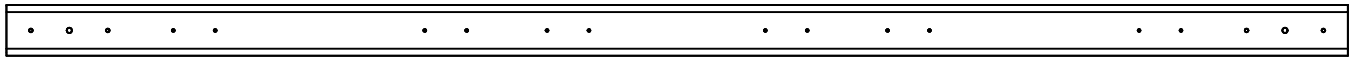 4"x6"x96" - SWING BEAM | 1 |
| B | 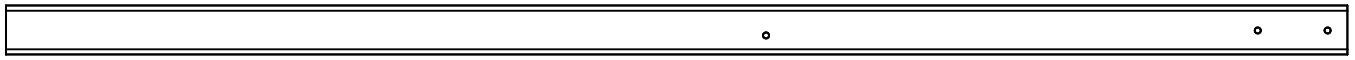 3 1/2"x3 1/2"x 96" - SWING BEAM LEG | 4 |
| C | 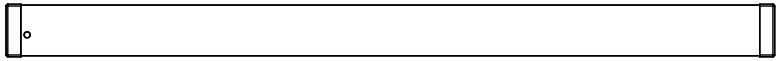 2"x4"x60" - A-FRAME BRACE | 1 |
| D | 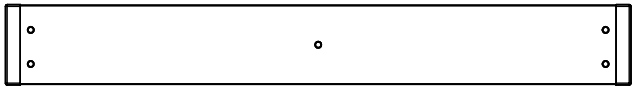 2"x6"x42" - FLOOR CAP | 1 |
| D1 | 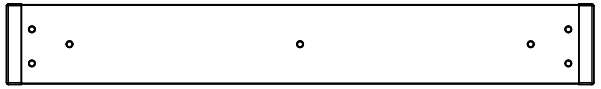 2"x6"x42" - FLOOR CAP | 2 |

# PARTS IDENTIFICATION

## WOOD COMPONENTS

| ID LETTER | DESCRIPTION | QUANTITY |
|---|---|---|
| E | 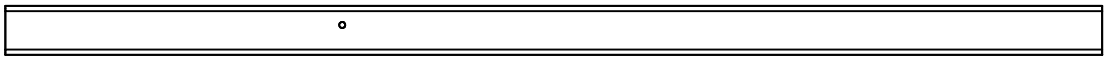 3 1/2"x 3 1/2"x78 1/2" - DECK UPRIGHT | 2 |
| F | 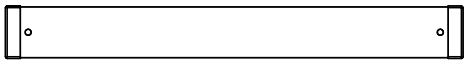 2"x4"x32 3/4" - LADDER BOARD | 6 |
| G | 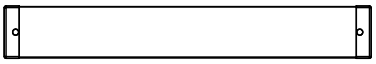 2"x4"x26 1/4" - END CAP | 2 |
| H | 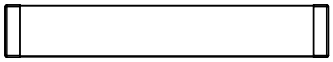 2"x4"x23" - FLOOR JOIST | 3 |
| I | 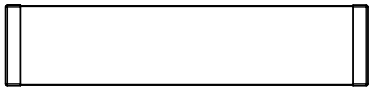 2"x6"x25" - END CAP | 1 |
| J | 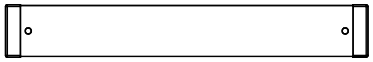 2"x4"x25" - WALL RAIL | 2 |
| K | 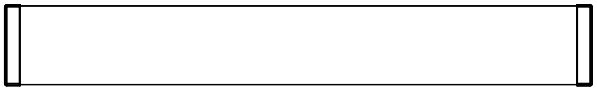 1"x6"x42" - FLOOR BOARD | 4 |
| M | 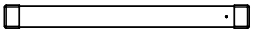 2"x2"x21" - WALL SLAT | 14 |

# PARTS IDENTIFICATION

## HARDWARE

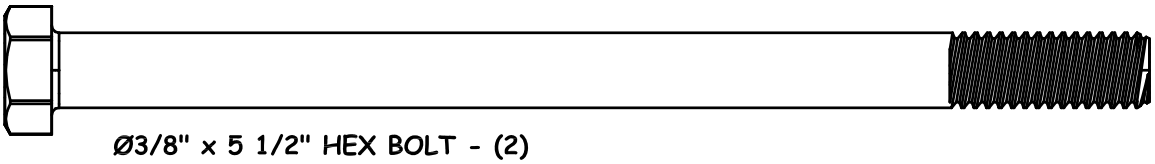

Ø3/8" x 5 1/2" HEX BOLT - (2)

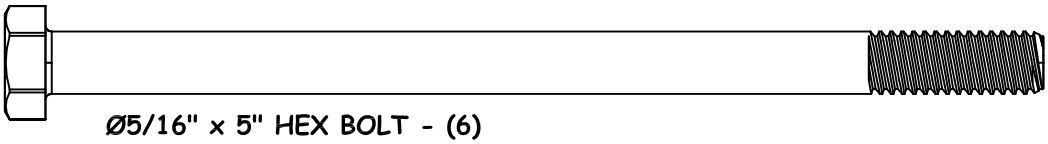

Ø5/16" x 5" HEX BOLT - (6)

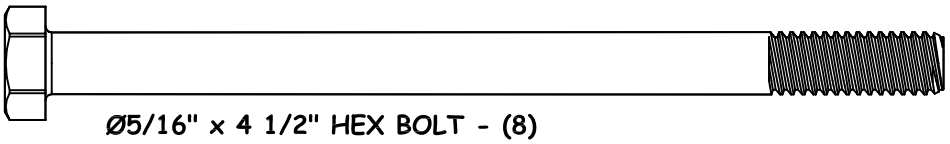

Ø5/16" x 4 1/2" HEX BOLT - (8)

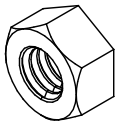

Ø5/16" LOCK NUT (10)

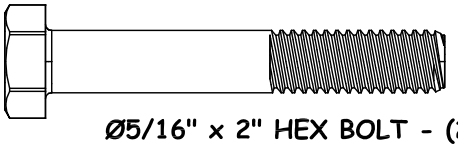

Ø5/16" x 2" HEX BOLT - (2)

#8 x 3" DECK SCREW - (19)

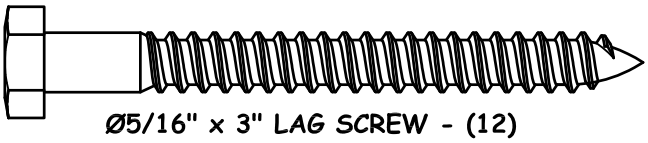

Ø5/16" x 3" LAG SCREW - (12)

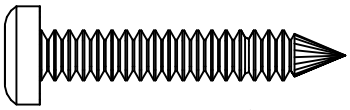

#8" x 1 1/2"
PAN HEAD SCREW - (4)

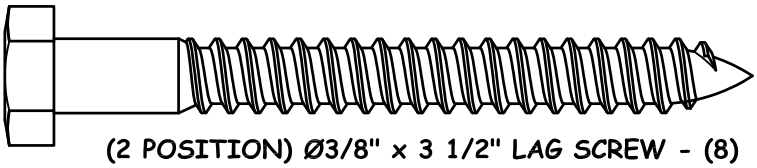

(2 POSITION) Ø3/8" x 3 1/2" LAG SCREW - (8)
(3 POSITION) Ø3/8" x 3 1/2" LAG SCREW - (12)

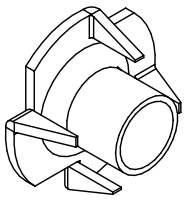

Ø3/8" TEE NUT (2)

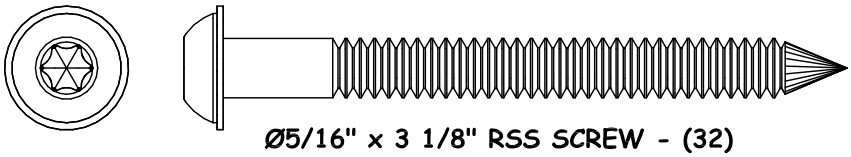

Ø5/16" x 3 1/8" RSS SCREW - (32)

#8 x 2 1/2" DECK SCREW - (48)

#12 x 1" PAN HEAD SCREW - (3)

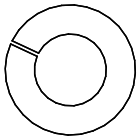

Ø5/16" LOCK WASHER
(12)

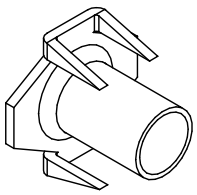

Ø5/16" TEE NUT (6)

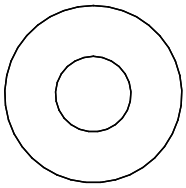

Ø5/16" FLAT WASHER (38)

STAR DRIVE (1)

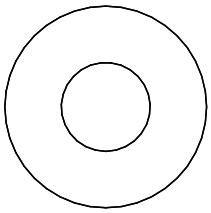

Ø3/8" FLAT WASHER (14)

# PHASE 1

# A-FRAME ASSEMBLY

| TABLE 1 - PARTS AND HARDWARE | | |
|---|---|---|
| ID LETTER | DESCRIPTION | QTY |
| B | SWING BEAM LEG - 3½" x 3½" x 96" | 4 |
| | Ø5/16" T-NUT | 4 |

STEP 1: Gather parts and hardware shown in table 1.

STEP 2: Lay swing beam leg 'B' flat on the ground with pre-drill holes up as ***Shown in Detail - 1***

***Pay close attention to the hole orientation of the swing beam leg 'B' when installing the T-Nuts. you must install the t-nuts in the correct location or you will not be able to assemble you playsystem correctly.*** (***Shown in Detail - 1***)

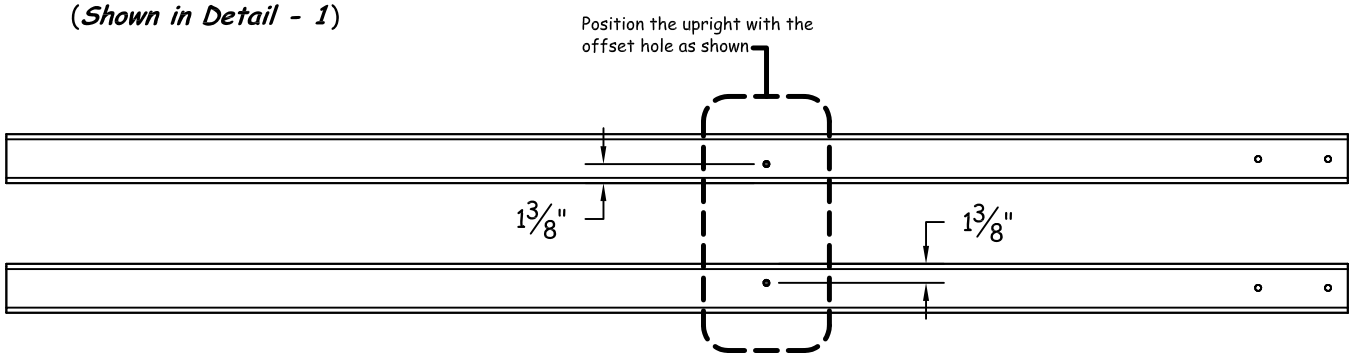


Detail - 1

STEP 3: Screw one Ø5/16 x 4" in the back of the Ø5/16" pallet nut. (***Shown in Detail - 3***)

STEP 4: Place Ø5/16" pallet nut with Ø5/16 x 4" into first hole, secure the pallet to the top hole by hitting the hex bolt with a hammer. (***Shown in Detail - 2***)

STEP 5: Remove hex bolt and repeat "STEP 4" to remaining holes.

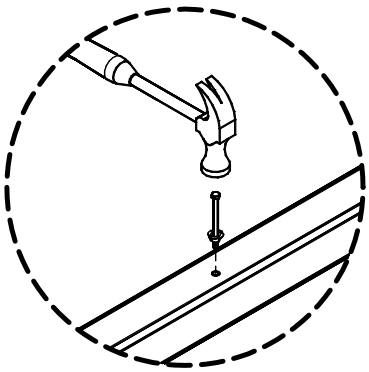

Detail - 2
BOTTOM VIEW

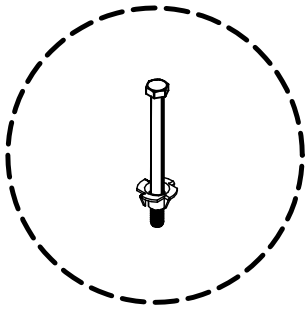

Detail - 3

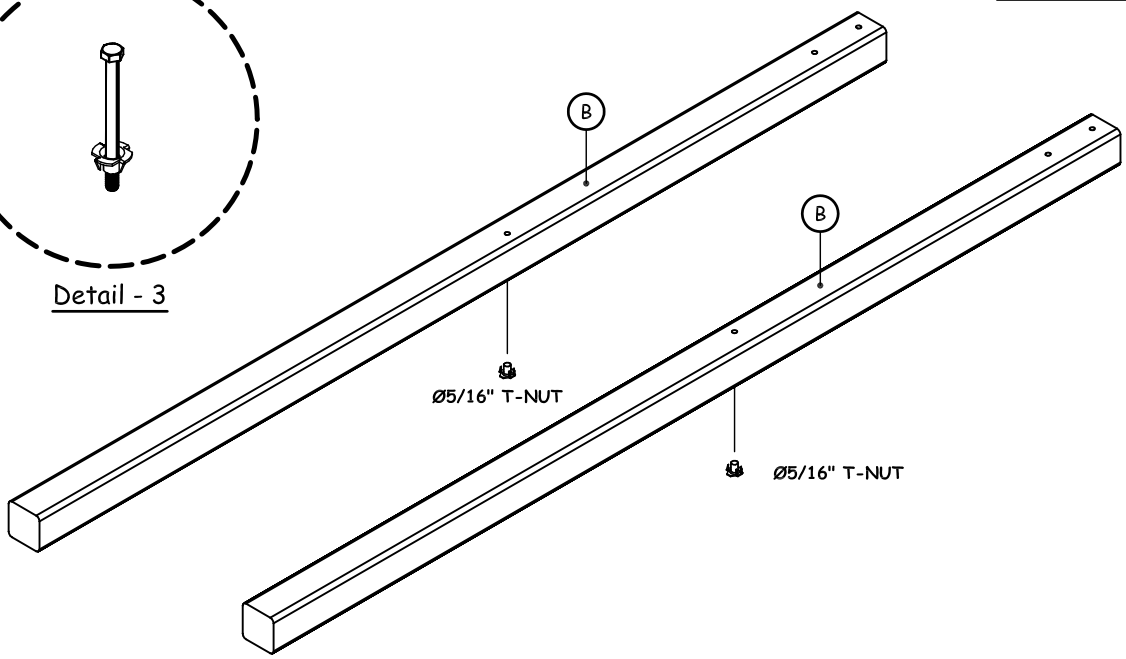

# PHASE 2

## A-FRAME ASSEMBLY - Cont.

STEP 1: Gather parts and hardware shown in table 2.

| TABLE 2 - PARTS AND HARDWARE | | |
|---|---|---|
| ID LETTER | DESCRIPTION | QTY |
| D | FLOOR CAP | 1 |
| | A-FRAME BRACKET | 1 |
| | Ø5/16" x 5" HEX BOLT | 2 |
| | Ø5/16" x 4 1/2" HEX BOLT | 4 |
| | Ø5/16" x 3" LAG SCREWS | 4 |
| | Ø5/16" x 3 1/8" RRS SCREWS | 2 |
| | Ø5/16" FLAT WASHERS | 14 |
| | Ø5/16" LOCK WASHERS | 4 |
| | Ø5/16" LOCK NUT | 4 |
| | SUPPLIED STAR DRIVE | 1 |

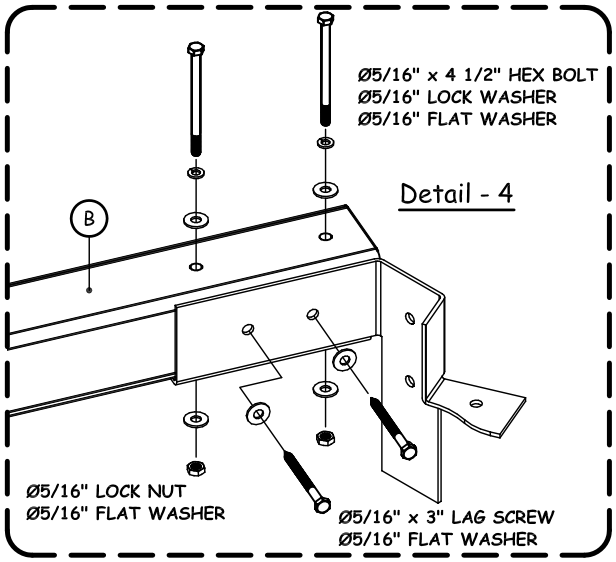


Detail - 4

STEP 2: Attach A-Frame bracket to swing beam leg 'B' with Ø5/16 x 4 1/2" hex bolt, (2) Ø5/16" flat washer and Ø5/16" lock washer and Ø5/16" lock nut., finish attaching the a-frame with Ø5/16" x 3" lag screw and Ø5/16" flat washer. (***Shown in Detail - 4***)

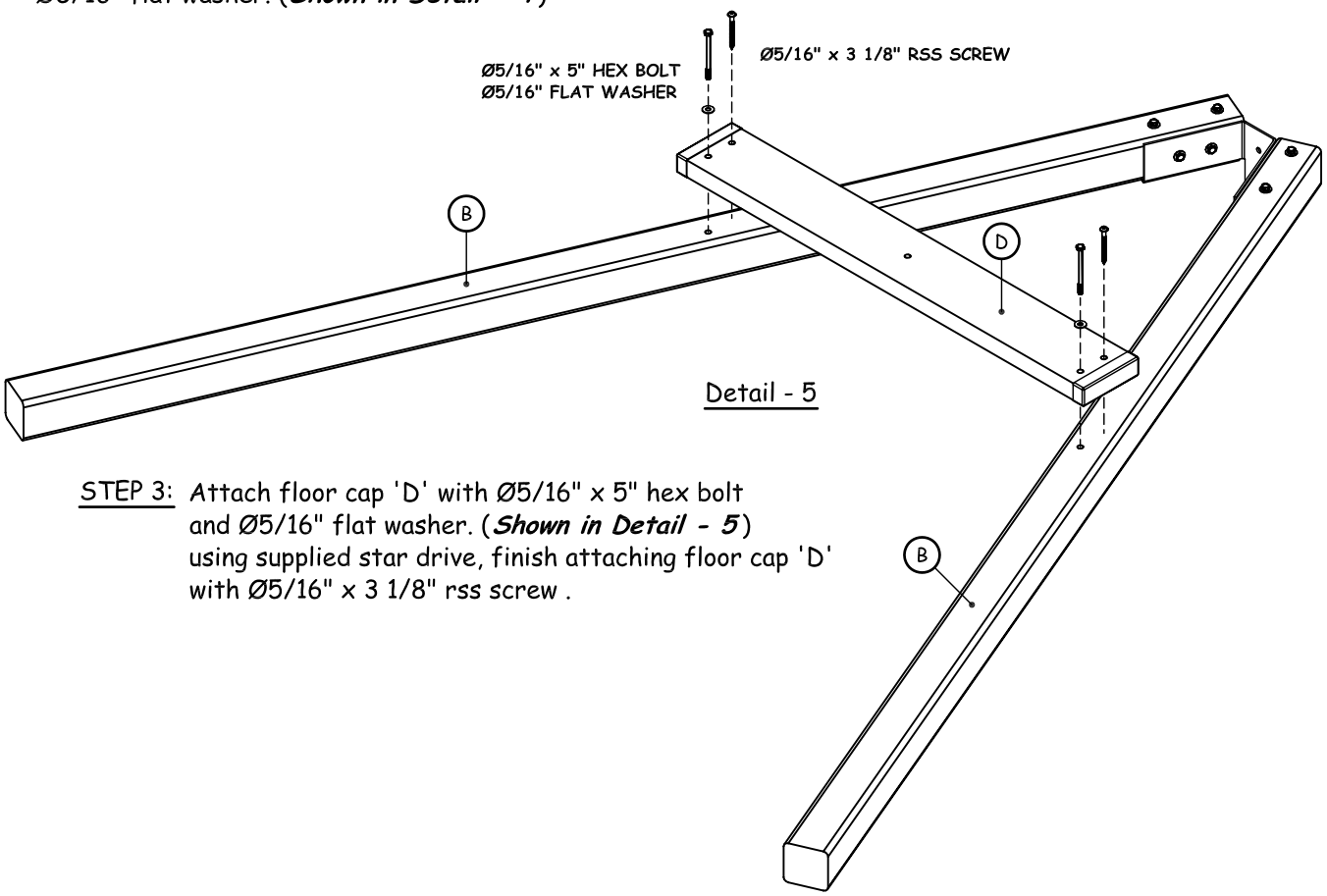


Detail - 5

STEP 3: Attach floor cap 'D' with Ø5/16" x 5" hex bolt and Ø5/16" flat washer. (***Shown in Detail - 5***) using supplied star drive, finish attaching floor cap 'D' with Ø5/16" x 3 1/8" rss screw .

# PHASE 3

# A-FRAME ASSEMBLY - Cont.
## ** DECK SIDE **

STEP 1: Gather parts and hardware shown in table 3.

| TABLE 3 - PARTS AND HARDWARE | | |
|---|---|---|
| ID LETTER | DESCRIPTION | QTY |
| D1 | FLOOR CAP | 1 |
| | A-FRAME BRACKET | 1 |
| | Ø5/16" x 5" HEX BOLT | 2 |
| | Ø5/16" x 4 1/2" HEX BOLT | 4 |
| | Ø5/16" x 3" LAG SCREWS | 4 |
| | Ø5/16" x 3 1/8" RRS SCREWS | 2 |
| | Ø5/16" FLAT WASHERS | 14 |
| | Ø5/16" LOCK WASHERS | 4 |
| | Ø5/16" LOCK NUT | 4 |

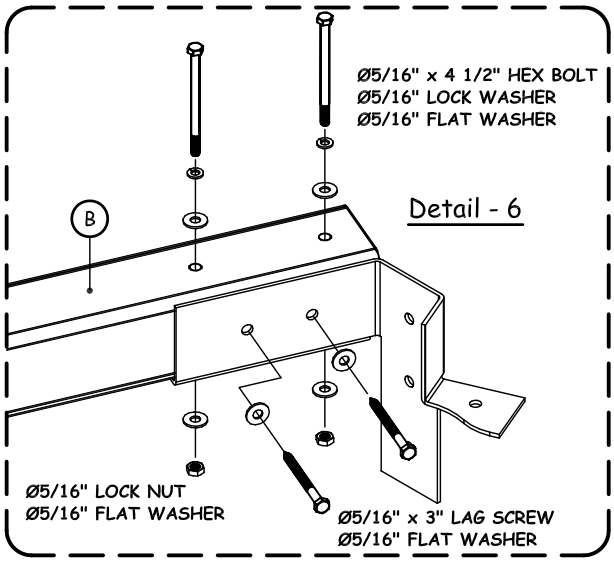

Detail - 6

STEP 2: Attach A-Frame bracket to swing beam leg 'B' with Ø5/16 x 4 1/2" hex bolt, (2) Ø5/16" flat washer and Ø5/16" lock washer and Ø5/16" lock nut., finish atttaching the a-frame with Ø5/16" x 3" lag screw and Ø5/16" flat washer. (***Shown in Detail - 6***)

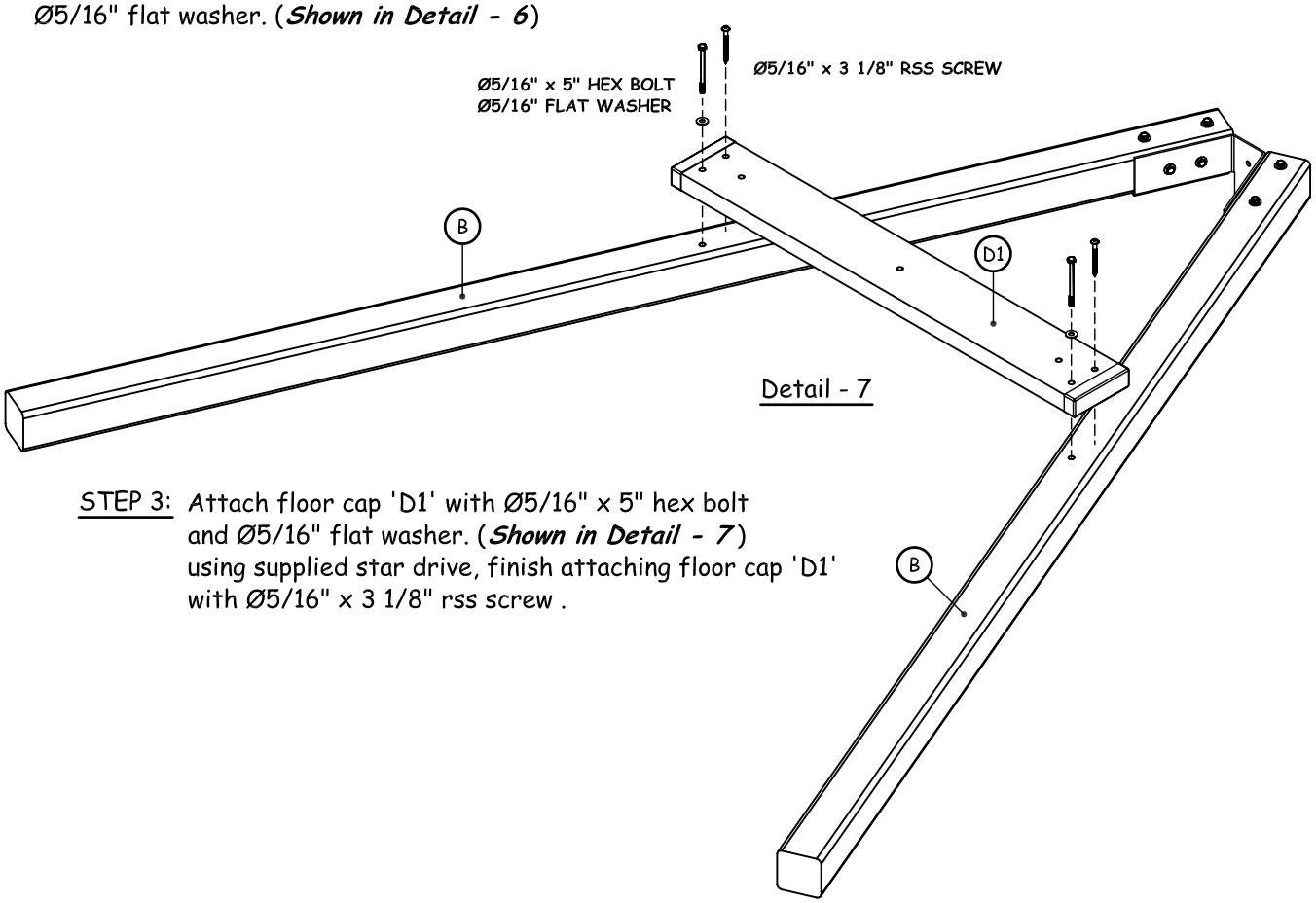

Detail - 7

STEP 3: Attach floor cap 'D1' with Ø5/16" x 5" hex bolt and Ø5/16" flat washer. (***Shown in Detail - 7***) using supplied star drive, finish attaching floor cap 'D1' with Ø5/16" x 3 1/8" rss screw .

# PHASE 4a

## SWING BEAM HANGER ATTACHMENT
## *** 2 POSITION SWINGBEAM ***

| TABLE 4a - PARTS AND HARDWARE | | |
|---|---|---|
| ID LETTER | DESCRIPTION | QTY |
| A | SWING BEAM | 1 |
| | Ø3/8" x 3 1/2" LAG SCREWS | 8 |
| | Ø3/8" FLAT WASHER | 8 |
| | Ø3/8" T-NUT | 2 |
| | SWING HANGER | 4 |

STEP 1: Gather parts and hardware shown in table 4a.

STEP 2: Screw one Ø3/8" x 5 1/2" hex bolt in the back of the Ø5/16" t-nut nut. ***(Shown in Detail - 8)***

STEP 3: Place Ø3/8" t-nut with Ø3/8" x 5 1/2" hex bolt into first hole, secure the t-nut to the top hole by hitting the hex bolt with a hammer. ***(Shown in Detail - 9)***

STEP 4: Remove hex bolt and repeat "STEP 2 & 3" to remaining holes.



Detail - 8



Detail - 9

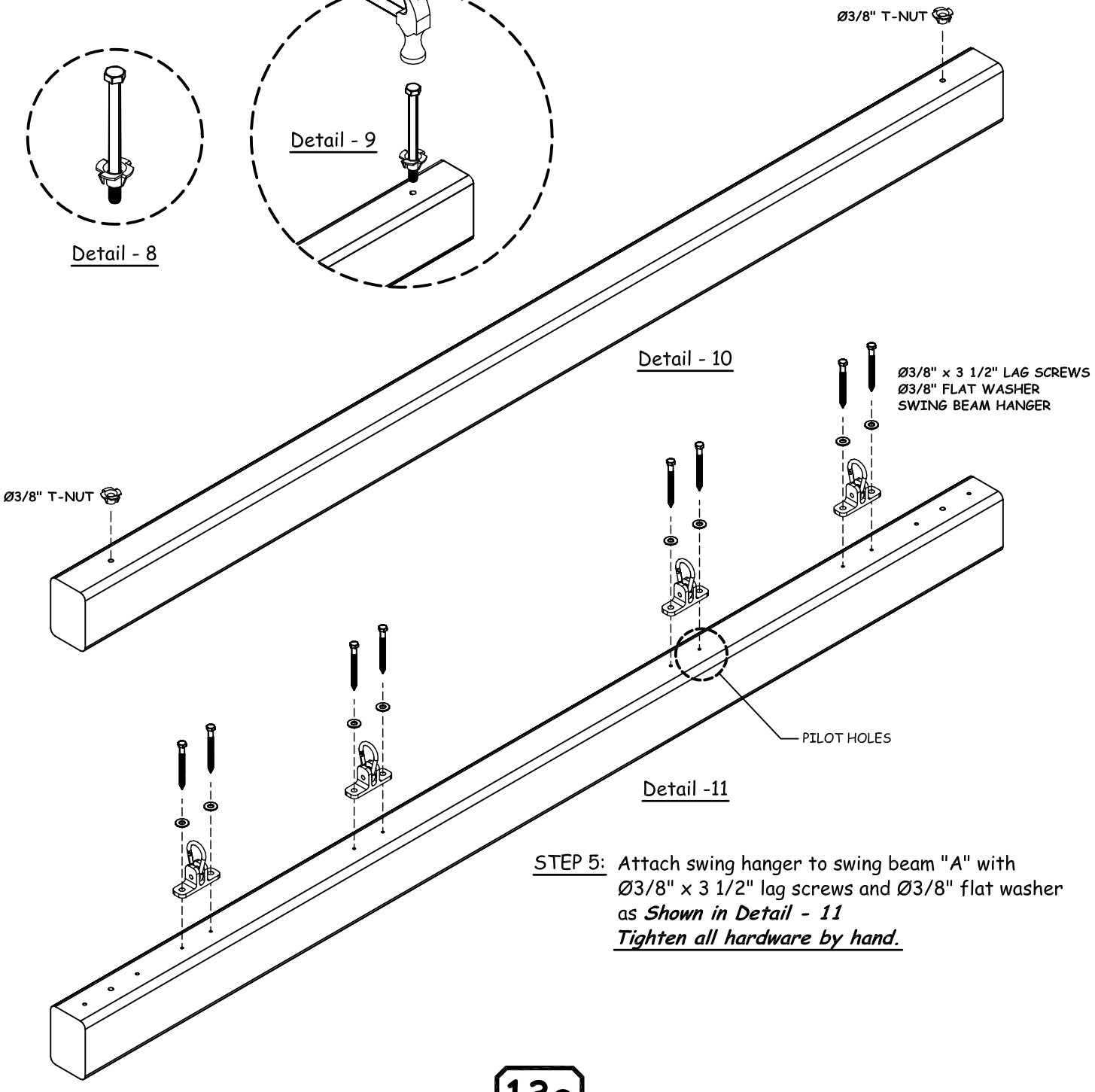


Detail - 10

Detail -11

STEP 5: Attach swing hanger to swing beam "A" with Ø3/8" x 3 1/2" lag screws and Ø3/8" flat washer as ***Shown in Detail - 11***
***Tighten all hardware by hand.***

# PHASE 4b

## SWING BEAM HANGER ATTACHMENT
## *** 3 POSITION SWINGBEAM ***

| TABLE 4b - PARTS AND HARDWARE | | |
|---|---|---|
| ID LETTER | DESCRIPTION | QTY |
| A | SWING BEAM | 1 |
| | Ø3/8" x 3 1/2" LAG SCREWS | 12 |
| | Ø3/8" FLAT WASHERS | 12 |
| | Ø3/8" T-NUT | 2 |
| | SWING HANGER | 6 |

STEP 1: Gather parts and hardware shown in table 4b.

STEP 2: Screw one Ø3/8" x 5 1/2" hex bolt in the back of the Ø5/16" pallet nut. (***Shown in Detail - 8***)

STEP 3: Place Ø3/8" pallet nut with Ø3/8" x 5 1/2" hex bolt into first hole, secure the t-nut to the top hole by hitting the hex bolt with a hammer. (***Shown in Detail - 9)***

STEP 4: Remove hex bolt and repeat "STEP 2 & 3" to remaining holes.



Detail - 8

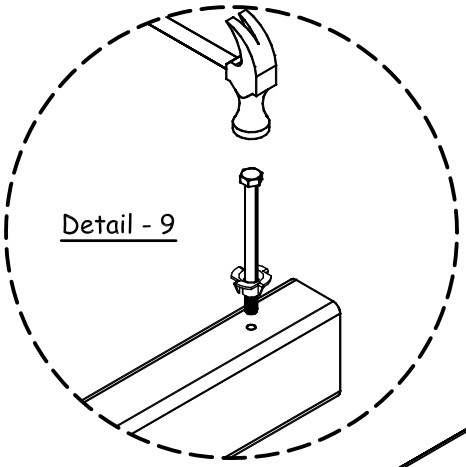

Detail - 9

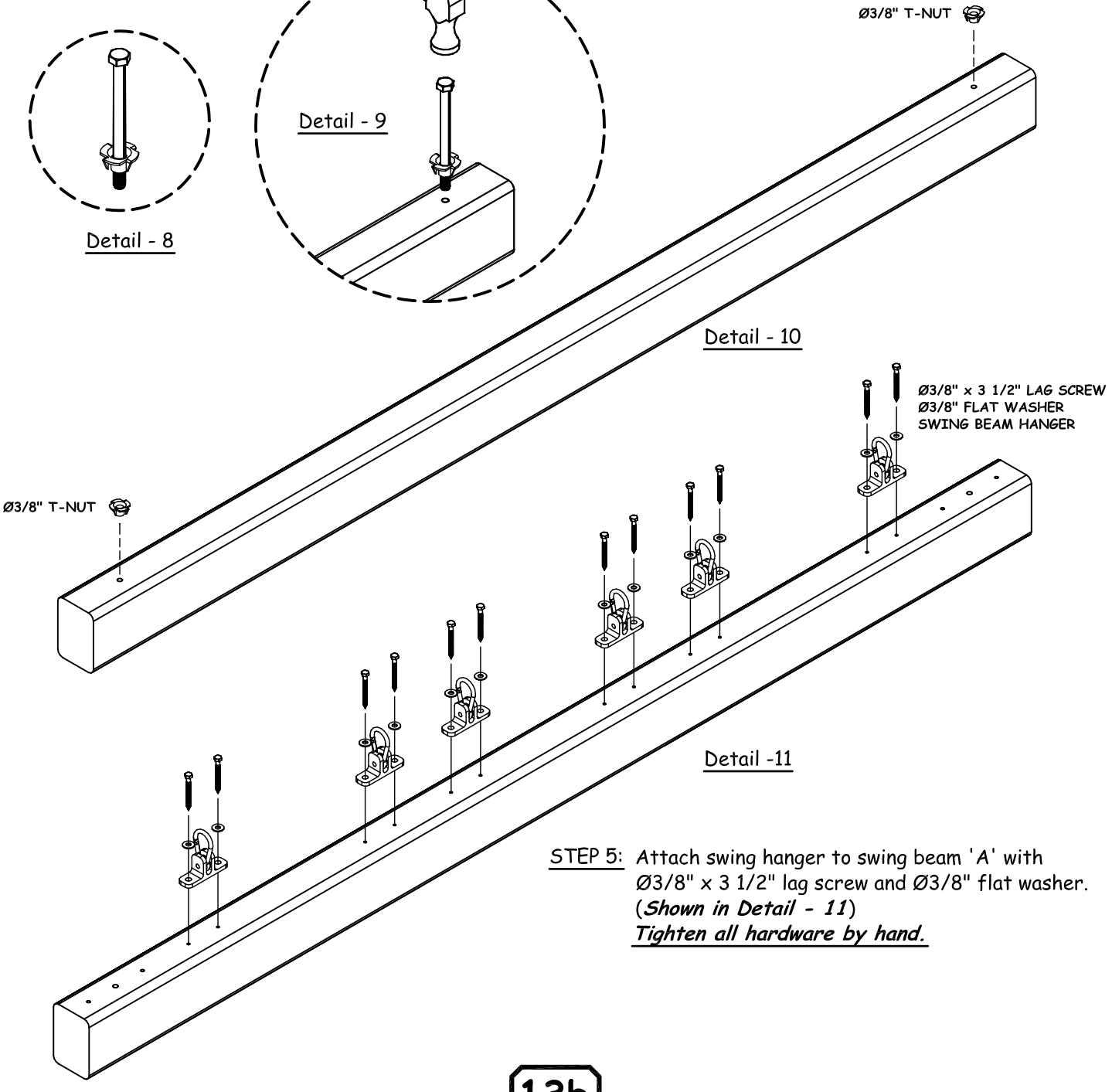


Detail - 10

Detail -11

STEP 5: Attach swing hanger to swing beam '*A*' with Ø3/8" x 3 1/2" lag screw and Ø3/8" flat washer. (***Shown in Detail - 11***)
***Tighten all hardware by hand.***

# PHASE 5

## SWING BEAM ATTACHMENT - Cont.

| TABLE 5 - PARTS AND HARDWARE | | |
|---|---|---|
| ID LETTER | DESCRIPTION | QTY |
| | Ø5/16" x 3" LAG SCREWS | 4 |
| | Ø3/8" x 5 1/2" HEX BOLT | 2 |
| | Ø5/16" FLAT WASHERS | 4 |
| | Ø3/8" FLAT WASHERS | 2 |

STEP 1: Gather parts and hardware shown in table 5.

***NOTE:***

***An adult helper is required to hold the A-frame assemblies and hold in place until phase 5 is complete.***

STEP 1: Attach swing beam to A-frame assemblies with Ø3/8" x 5 1/2" hex bolt and Ø3/8" flat washer. (***Shown in Detail - 12)***

STEP 2: Finish attaching swing beam with Ø5/16 x 3" lag screw and Ø5/16" flat washer. (***Shown in Detail - 12)***

DO NOT over tighten

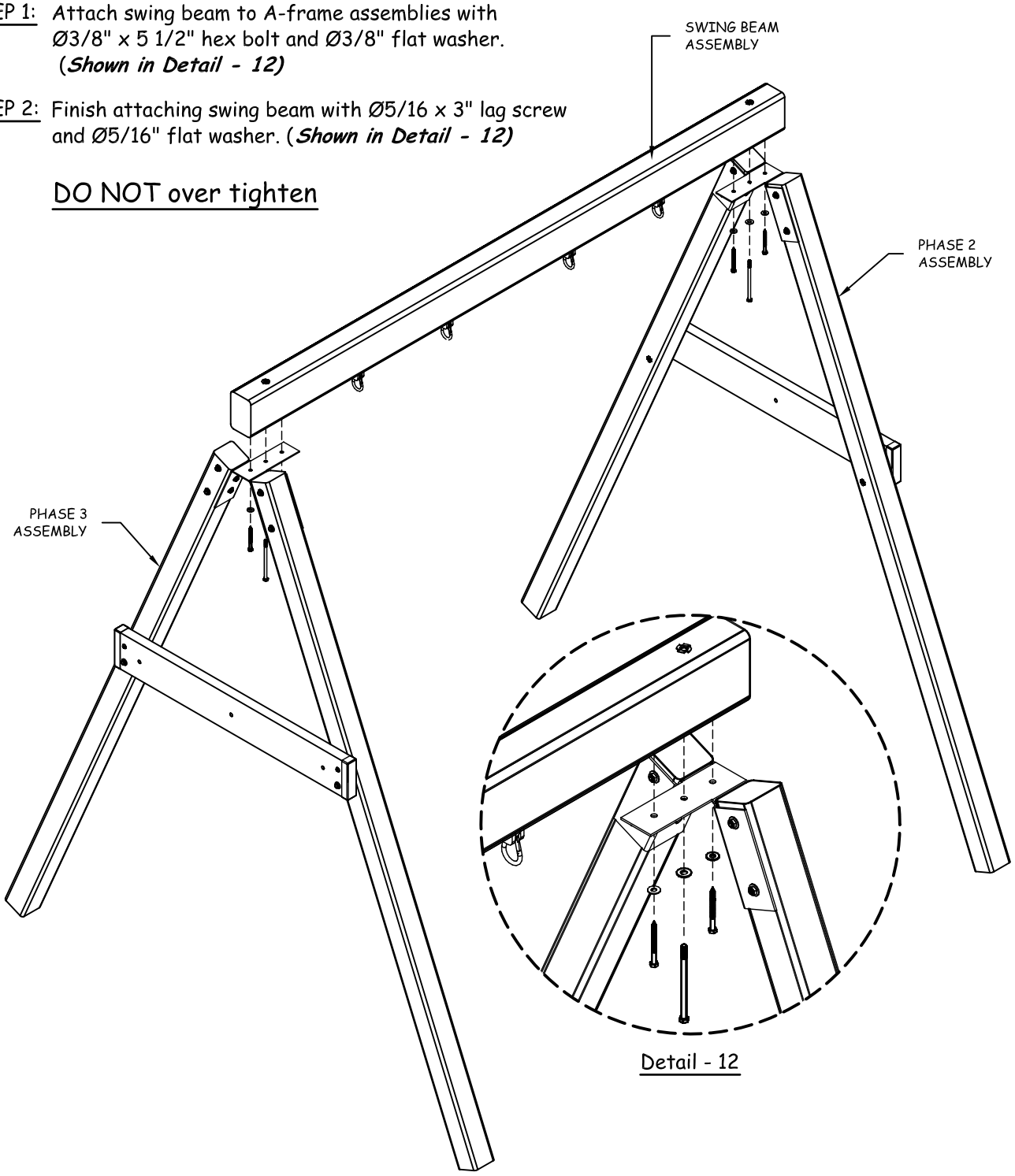


Detail - 12

# PHASE 6

# SWING ATTACHMENT

| TABLE 6 - PARTS AND HARDWARE | | |
|---|---|---|
| ID LETTER | DESCRIPTION | QTY |
| | SWING SEAT WITH CHAIN "2 POSITION" | 2 |

STEP 1: Gather parts and hardware shown in table 6.

***Note:*** ***With the adult help move the assembly where the playset will be used.***

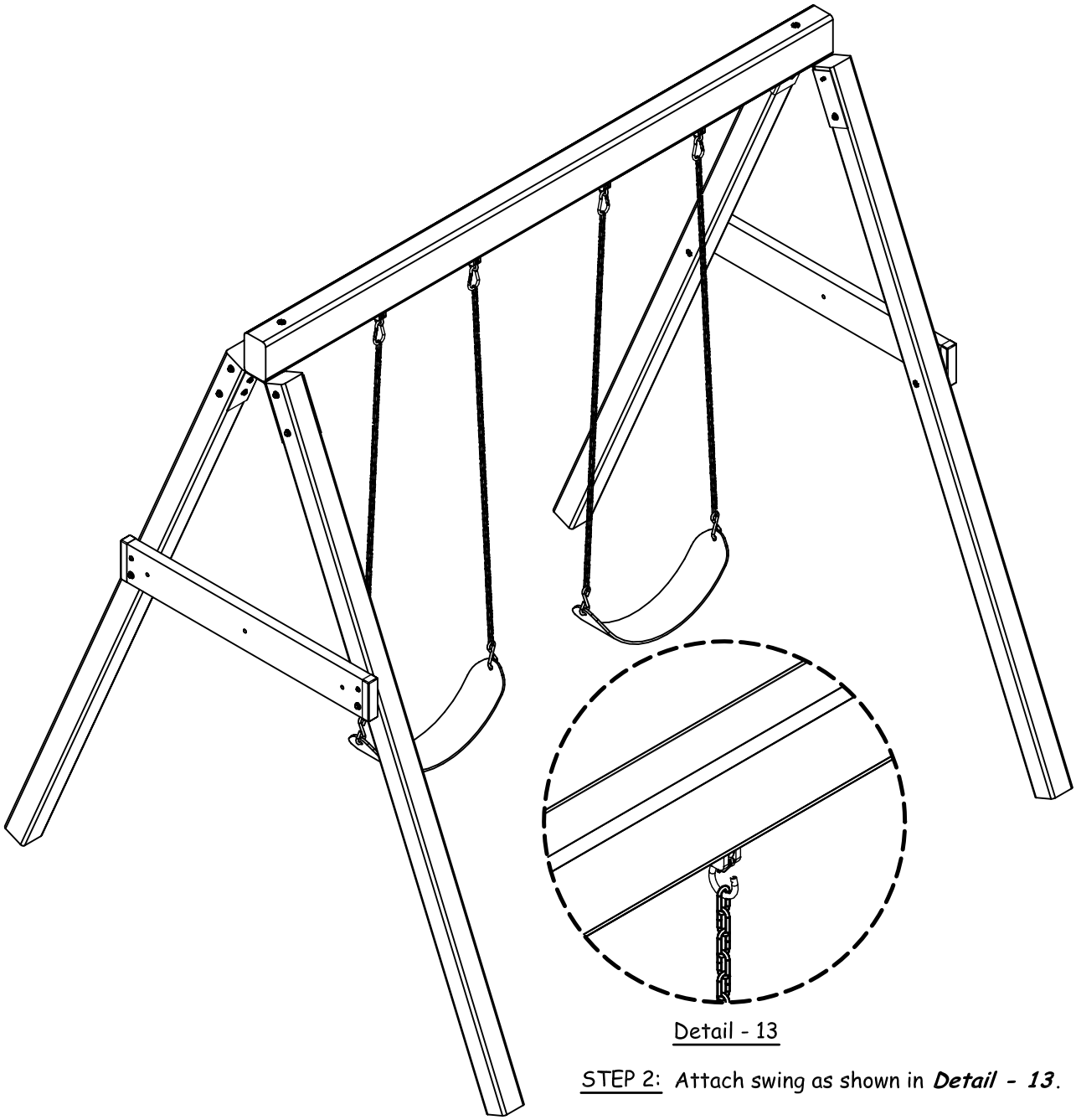

Detail - 13

STEP 2: Attach swing as shown in ***Detail - 13***.

# PHASE 7

# A-FRAME BRACE ATTACHMENT

STEP 1: Gather parts and hardware shown in table 7.

STEP 2: Attach L-bracket to floor cap 'D' with Ø5/16" x 2" hex bolt , Ø5/16" flat washer and Ø5/16" lock nut as shown in ***Detail - 14***.

STEP 3: Attach a-frame brace 'C' to L-bracket with Ø5/16" x 2" hex bolt, Ø5/16" flat washer Ø5/16" lock nut as shown in ***Detail - 15***.

**TABLE 7 - PARTS AND HARDWARE**

| ID LETTER | DESCRIPTION | QTY |
|---|---|---|
| C | A-FRAME BRACE | 1 |
| | L - BRACKET | 1 |
| | Ø5/16" x 2" HEX BOLT | 2 |
| | Ø5/16" FLAT WASHER | 4 |
| | Ø5/16" LOCK NUT | 2 |

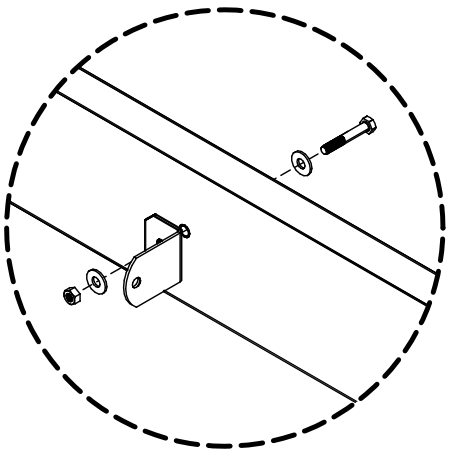

Detail - 14

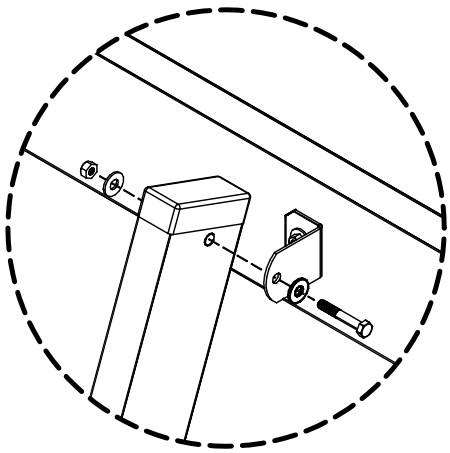

Detail - 15

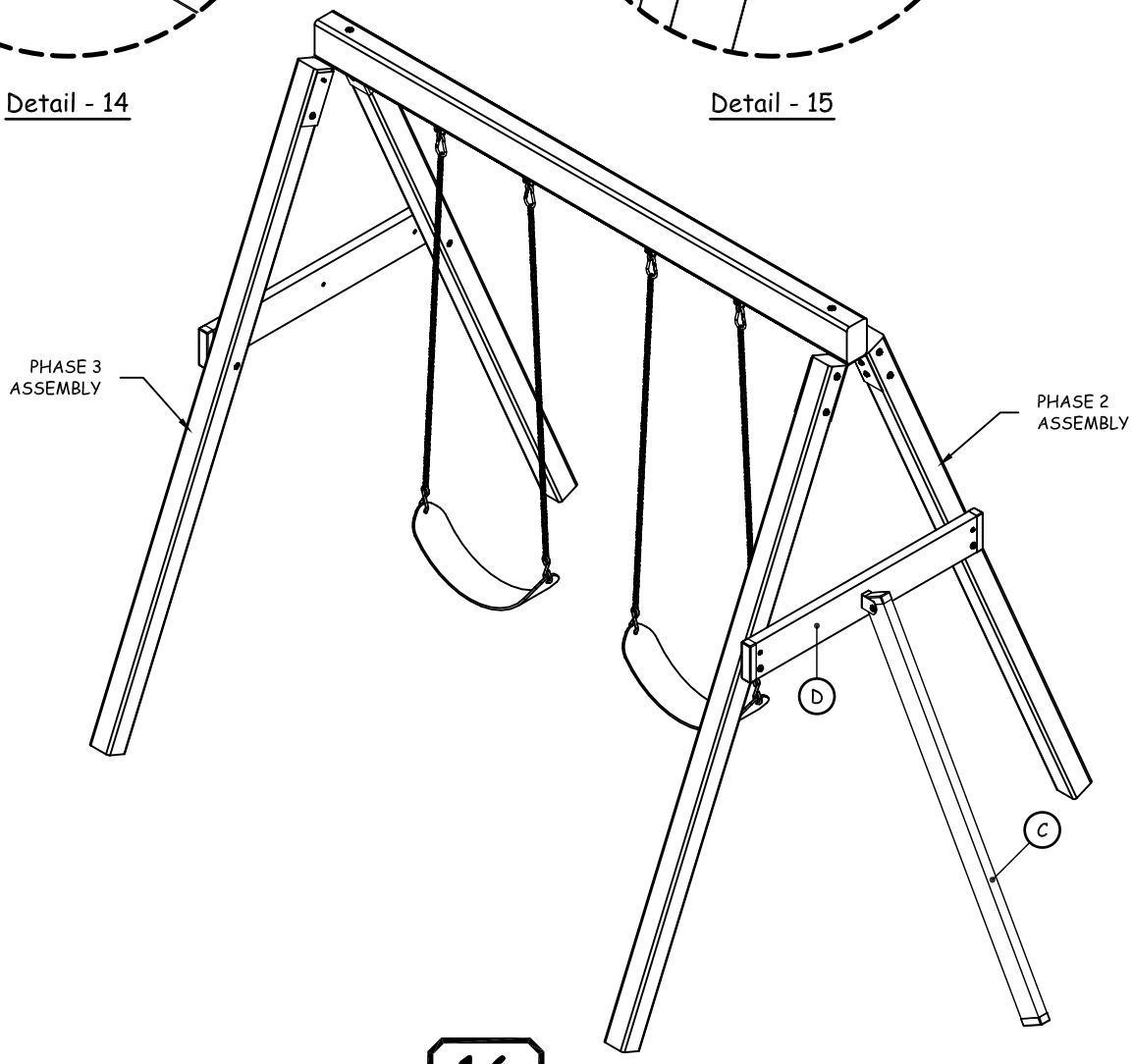

# PHASE 8

# DECK ASSEMBLY

| TABLE 8 - PARTS AND HARDWARE | | |
|---|---|---|
| ID LETTER | DESCRIPTION | QTY |
| J | WALL RAIL | 1 |
| | Ø5/16" x 3 1/8" RSS SCREW | 2 |

STEP 1: Gather parts and hardware shown in table 8.

STEP 2: Measure 18 7/8" from the top of the floor cap 'D1' to the top of the wall rail 'J' as shown in ***Detail - 16***.

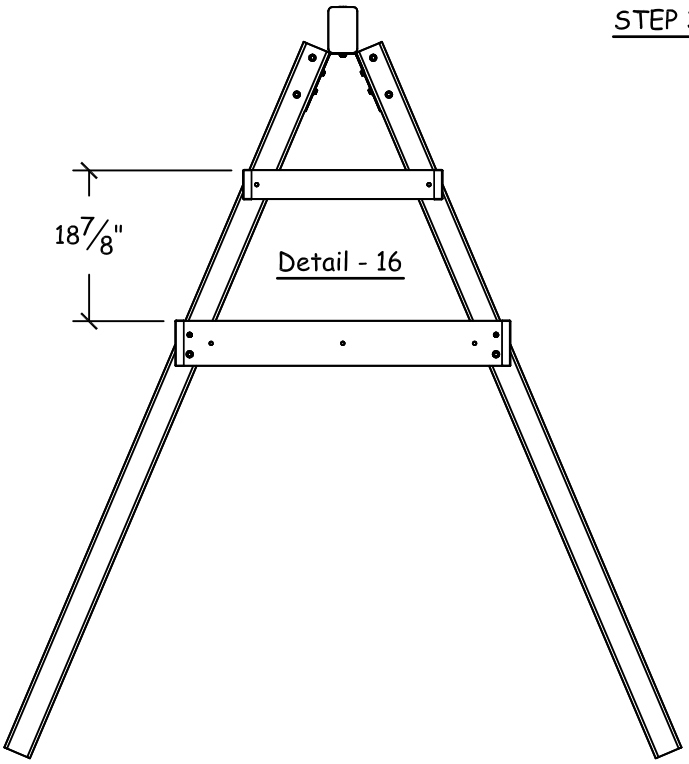


Detail - 16

STEP 3: Use a wood clamp to clamp wall rail 'J' to a-frame legs as shown ***Detail - 17***.

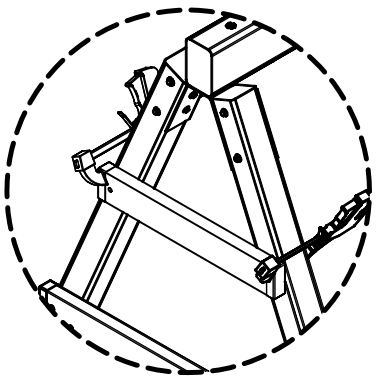

Detail - 17

STEP 4: Using supplied star drive, attach wall rail 'J' to A-frame leg with Ø5/16" x 3 1/8" rss screw.

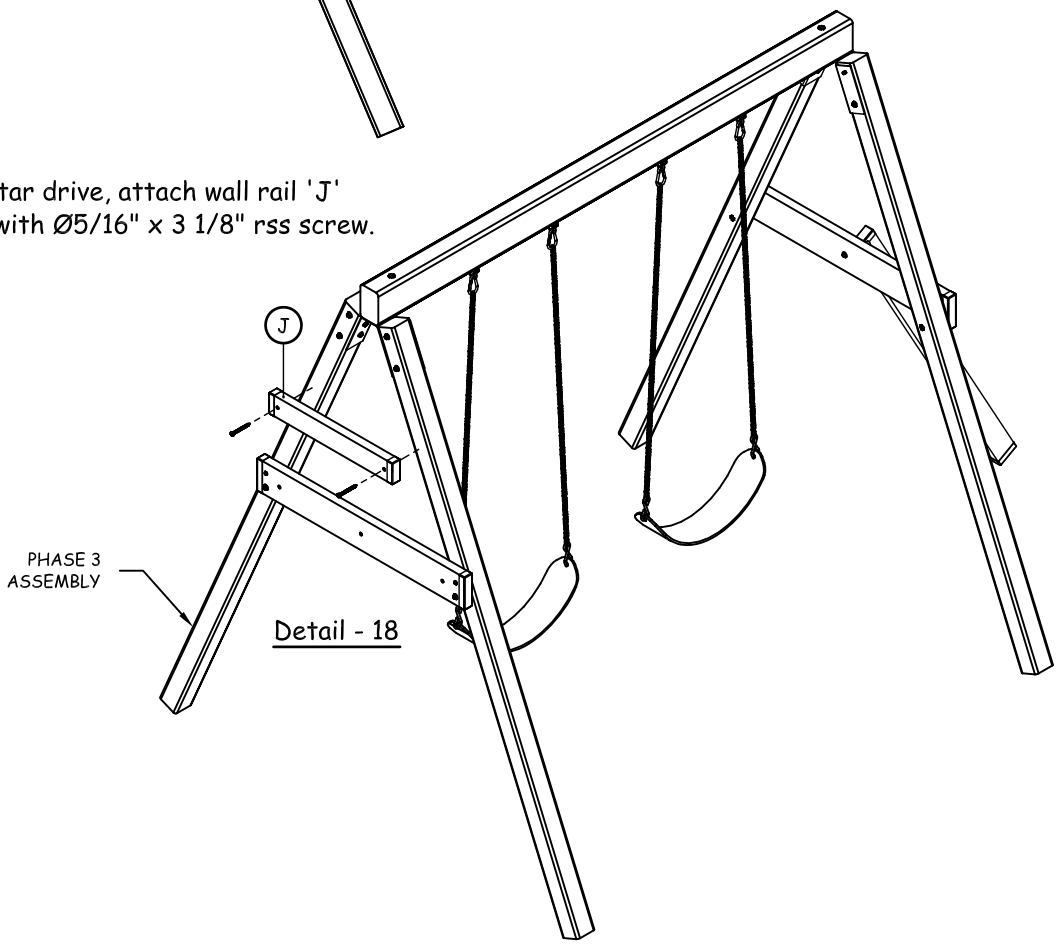


Detail - 18

# PHASE 9

## DECK ASSEMBLY - Cont.

| TABLE 9 - PARTS AND HARDWARE | | |
|---|---|---|
| ID LETTER | DESCRIPTION | QTY |
| E | DECK UPRIGHT | 2 |
| | Ø5/16" T-NUT | 2 |

STEP 1: Gather parts and hardware shown in table 9.

STEP 2: Lay deck upright "E" flat on the ground with pre-drill holes up as ***Shown in Detail - 19.***

***Pay close attention to the hole orientation of the deck upright "E" when installing the T-Nuts. you must install the t-nuts in the correct location or you will not be able to assemble you playsystem correctly.*** (***Shown in Detail - 19***)

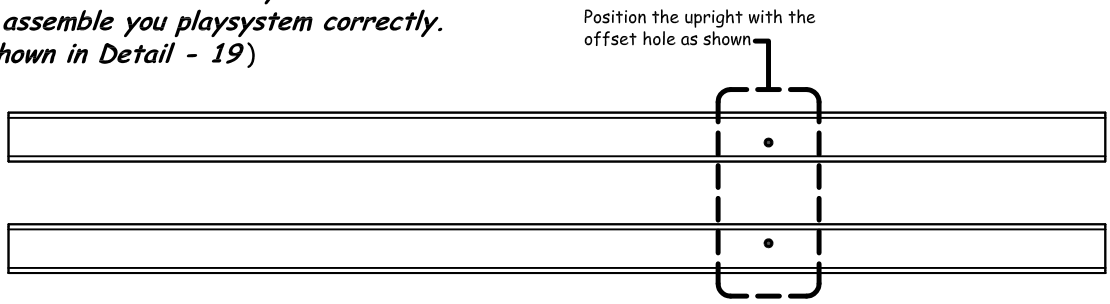


Detail - 19

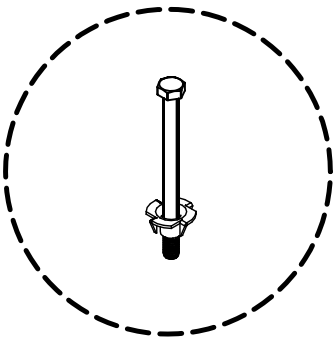

Detail - 20

STEP 3: Screw one Ø5/16 x 4" in the back of the Ø5/16" pallet nut. (***Shown in Detail - 20***)

STEP 4: Place Ø5/16" pallet nut with Ø5/16 x 4" into first hole, secure the pallet to the top hole by hitting the hex bolt with a hammer. (***Shown in Detail - 21***)

STEP 5: Remove hex bolt and repeat "STEP 4" to remaining holes.



Detail - 21
BOTTOM VIEW

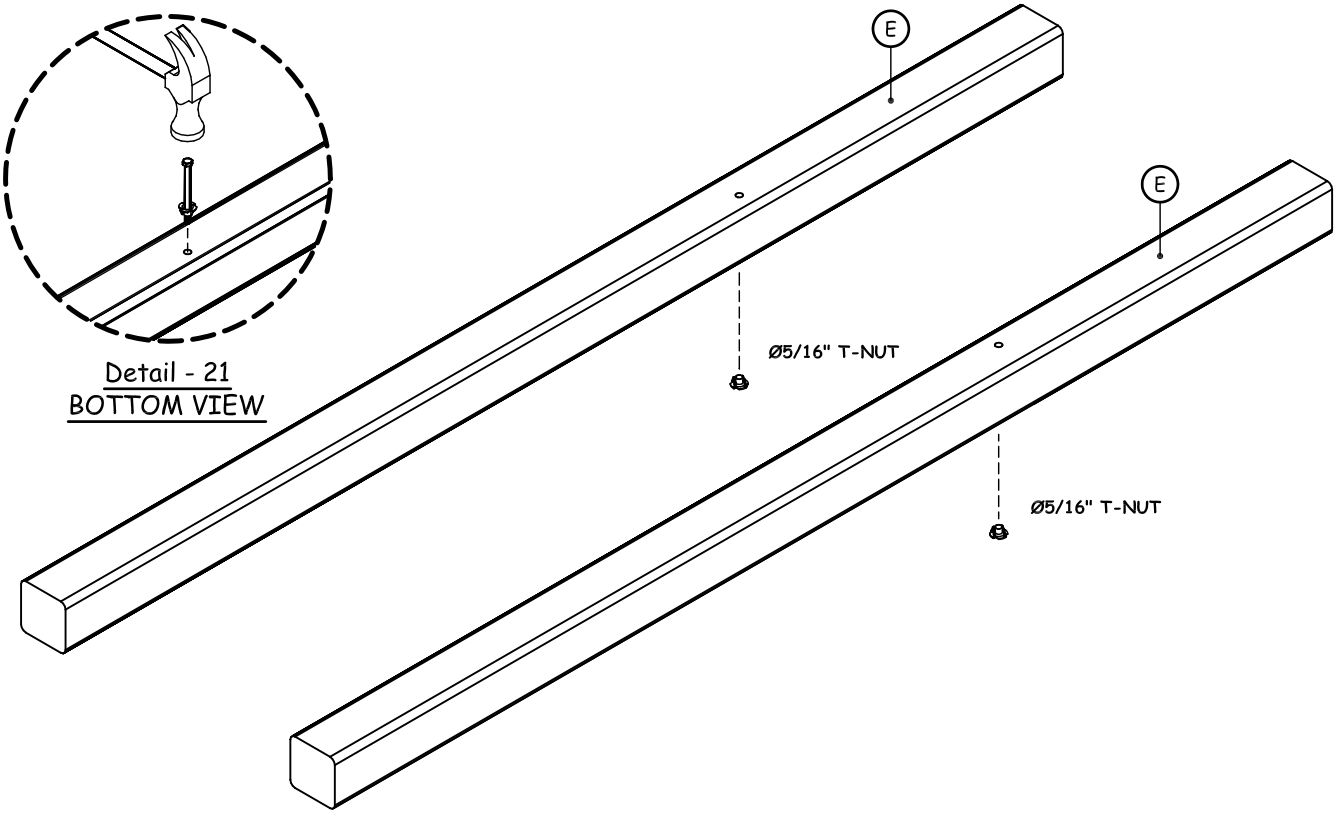

# PHASE 10

## DECK ASSEMBLY - Cont.

| TABLE 10 - PARTS AND HARDWARE | | |
|---|---|---|
| ID LETTER | DESCRIPTION | QTY |
| D1 | FLOOR CAP | 1 |
| J | WAL RAIL | 1 |
| | Ø5/16" x 3 1/8" RSS SCREW | 4 |
| | Ø5/16" x 5" HEX BOLT | 2 |
| | Ø5/16" FLAT WASHER | 2 |

STEP 1: Gather parts and hardware shown in table 10.

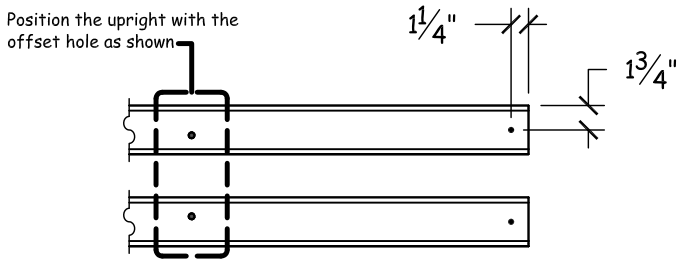


Detail - 22

STEP 2: Using a drill with a Ø3/16" drill bit., drill a pilot hole approximately 1-1/2" deep into upright as shown in ***Detail - 22***.

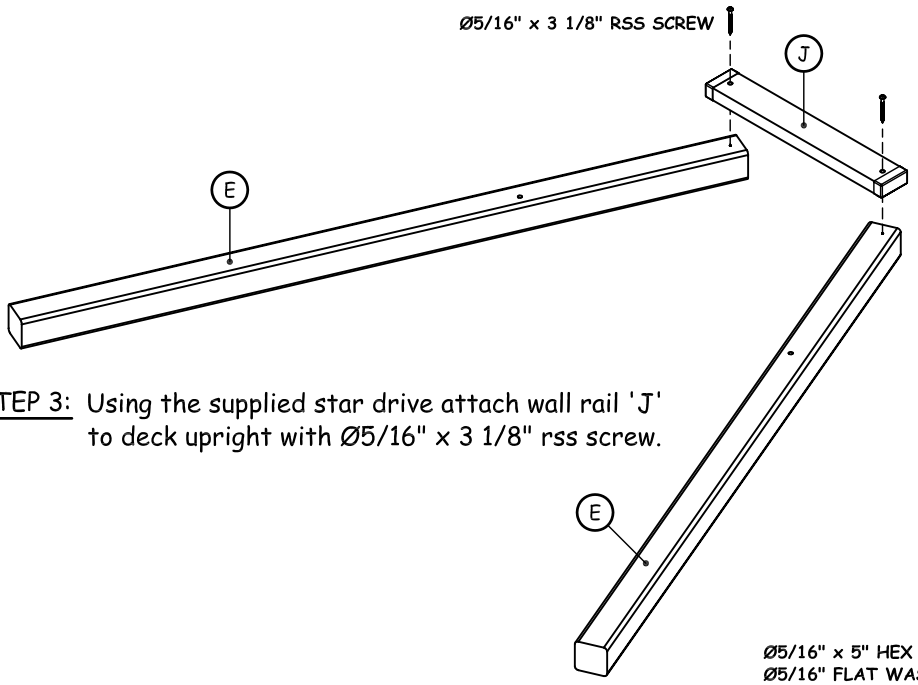


STEP 3: Using the supplied star drive attach wall rail 'J' to deck upright with Ø5/16" x 3 1/8" rss screw.

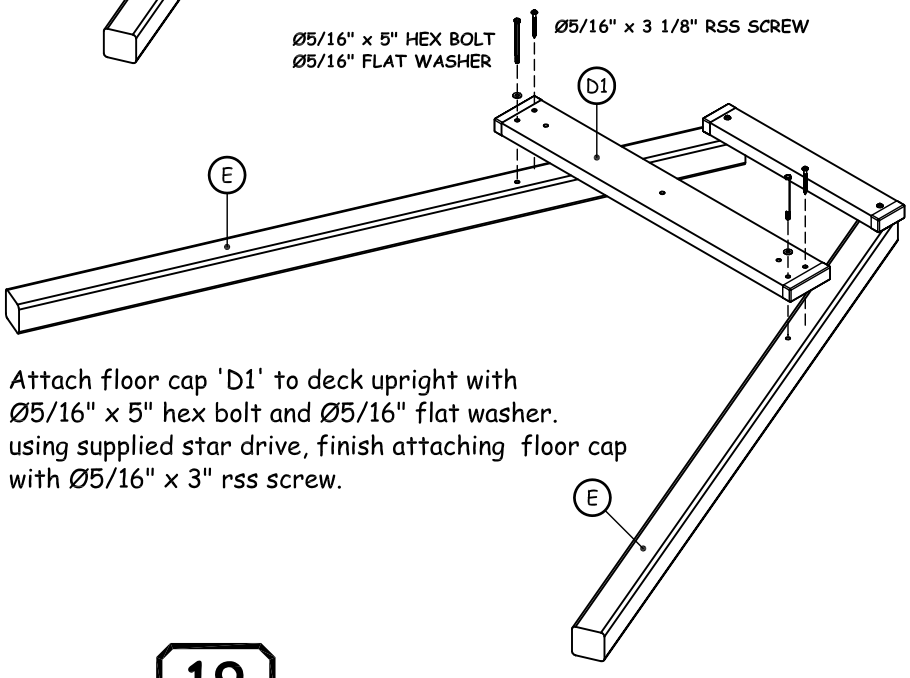


STEP 4: Attach floor cap 'D1' to deck upright with Ø5/16" x 5" hex bolt and Ø5/16" flat washer. using supplied star drive, finish attaching floor cap with Ø5/16" x 3" rss screw.

# PHASE 11

## DECK ASSEMBLY - Cont.

STEP 1: Gather parts and hardware shown in table 11.

| TABLE 11 - PARTS AND HARDWARE | | |
|---|---|---|
| ID LETTER | DESCRIPTION | QTY |
| G | FLOOR CAP | 2 |
| | Ø5/16" x 3 1/8" RSS SCREW | 4 |
| | SUPPLIED STAR DRIVE | 1 |

***NOTE:*** *When installing a board on the small face of a 2x4, pre-drilling the attachment hole is* ***REQUIRED.*** *Place the board where the attachment in needed and by using the holes in the floor cap 'G' as a guide drill hole into 2x4 with Ø3/16" drill bit 1-1/2" deep.*

***FAILURE TO PRE-DRILL MAY RESULT IN BOARD SPLITTING***

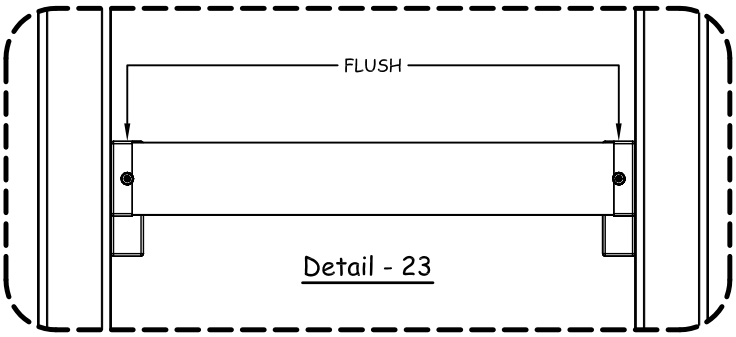


Detail - 23

STEP 2: Using the supplied star drive, attach floor cap 'G' flush to the top and edge of floor cap 'D1' with Ø5/16" x 3 1/8" rss screw as shown in ***Detail - 23***.

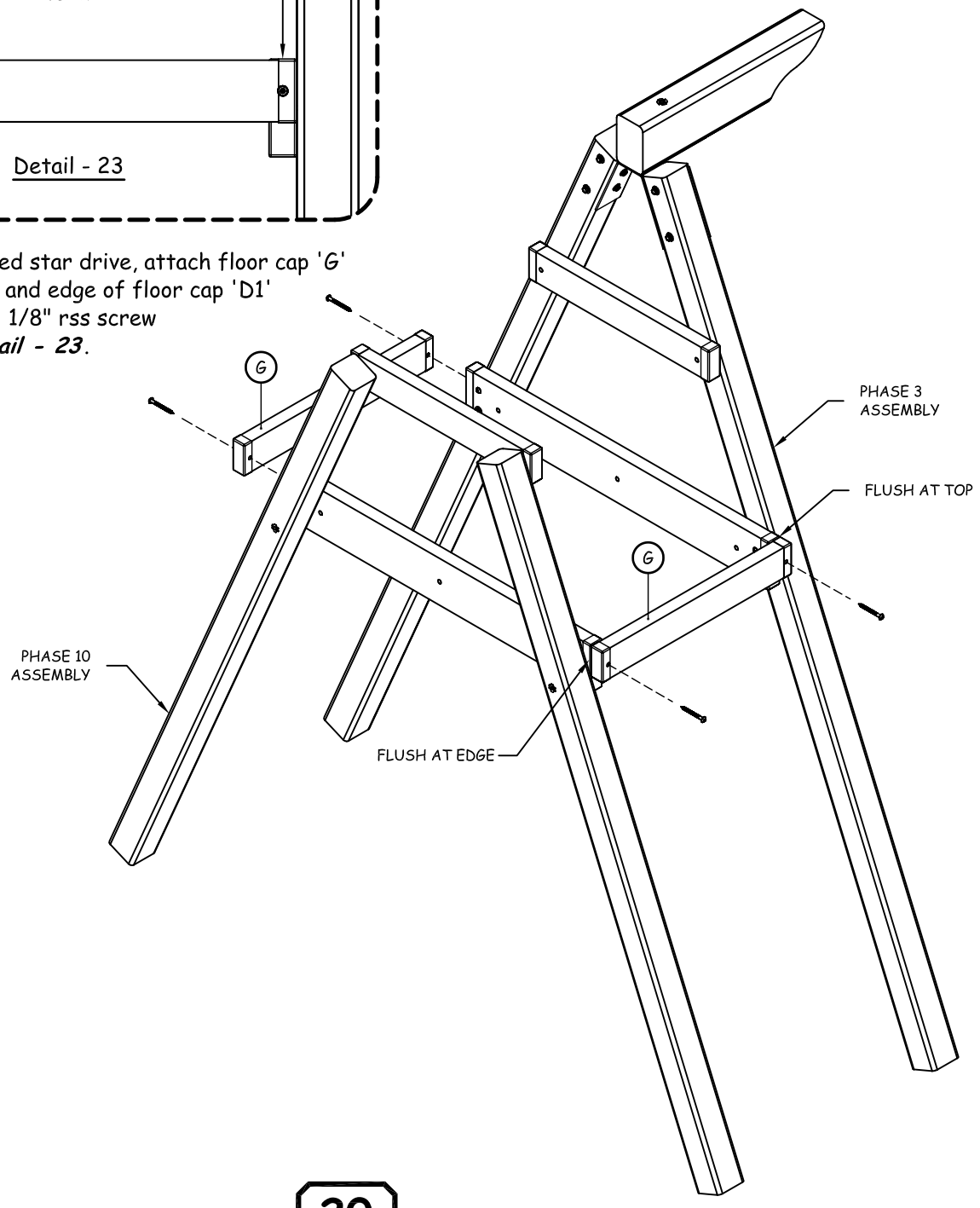

# PHASE 12

## DECK ASSEMBLY - Cont.

| TABLE 12 - PARTS AND HARDWARE | | |
|---|---|---|
| ID LETTER | DESCRIPTION | QTY |
| H | FLOOR JOIST | 3 |
| | Ø5/16" x 3 1/8" RSS SCREW | 6 |

STEP 1: Gather parts and hardware shown in table 12.

***NOTE:*** *When installing a board on the small face of a 2x4, pre-drilling the attachment hole is* ***REQUIRED.*** *Place the board where the attachment in needed and by using the holes in the floor cap 'D1' as a guide drill hole into 2x4 with Ø3/16" drill bit 1-1/2" deep.*

***FAILURE TO PRE-DRILL MAY RESULT IN BOARD SPLITTING***

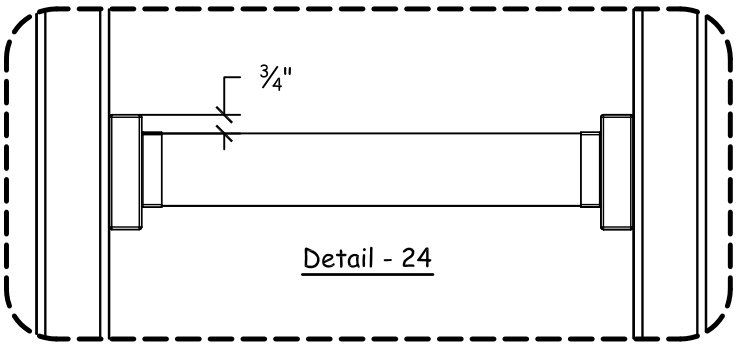


Detail - 24

STEP 2: Using supplied start drive, attach floor joist 'H' 3/4" below floor cap with Ø5/16" x 3 1/8" rss screw as shown in ***Detail - 24***.

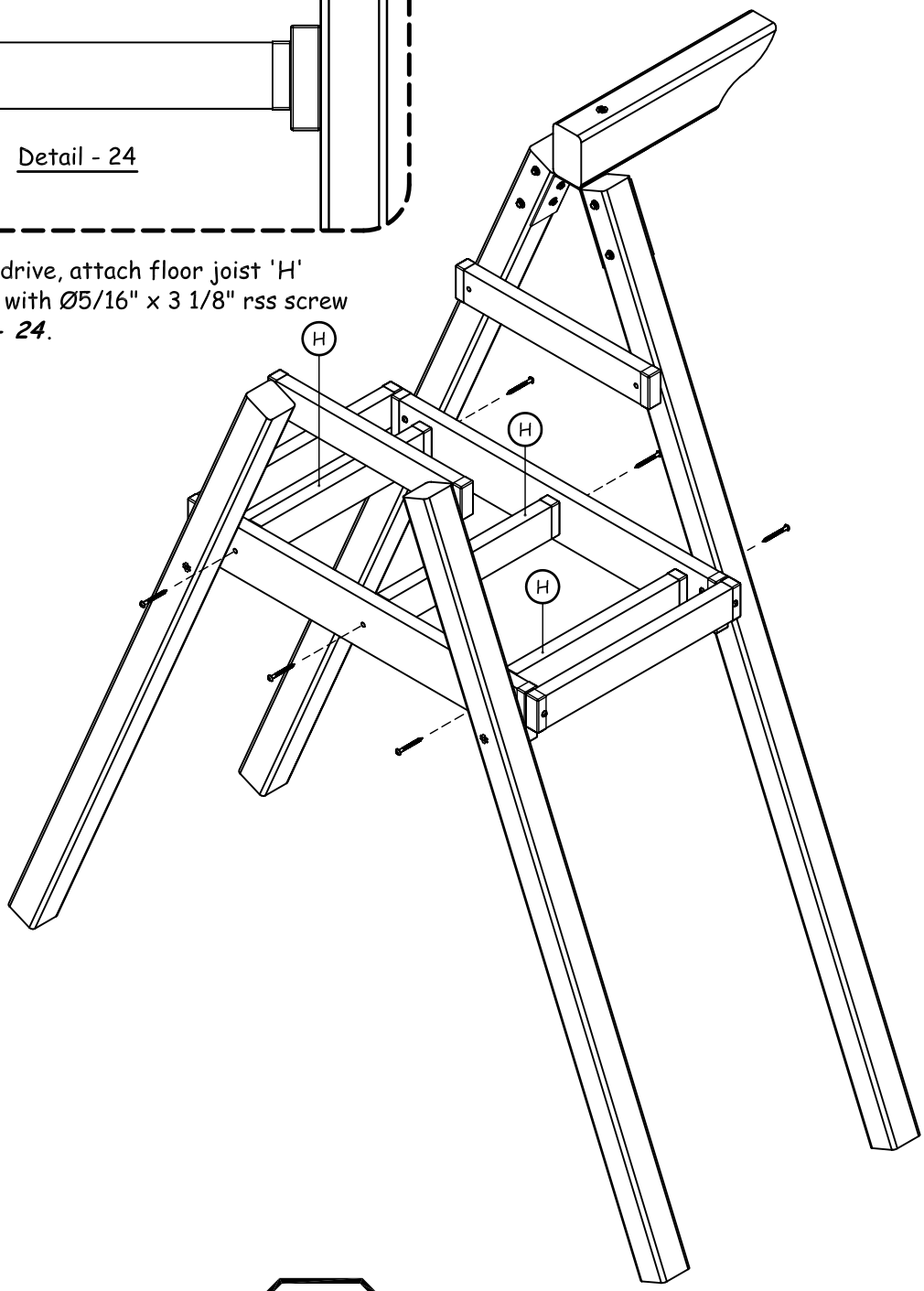

# PHASE 13

# FLOOR DECK ATTACHMENT

| TABLE 13 - PARTS AND HARDWARE | | |
|---|---|---|
| ID LETTER | DESCRIPTION | QTY |
| K | FLOOR BOARD | 4 |
| | #8 x 2 1/2" DECK SCREW | 20 |

STEP 1: Gather parts and hardware shown in table 13.

STEP 2: Attach floor board "K" to floor cap and floor joist with #8 x 2 1/2" deck screw.

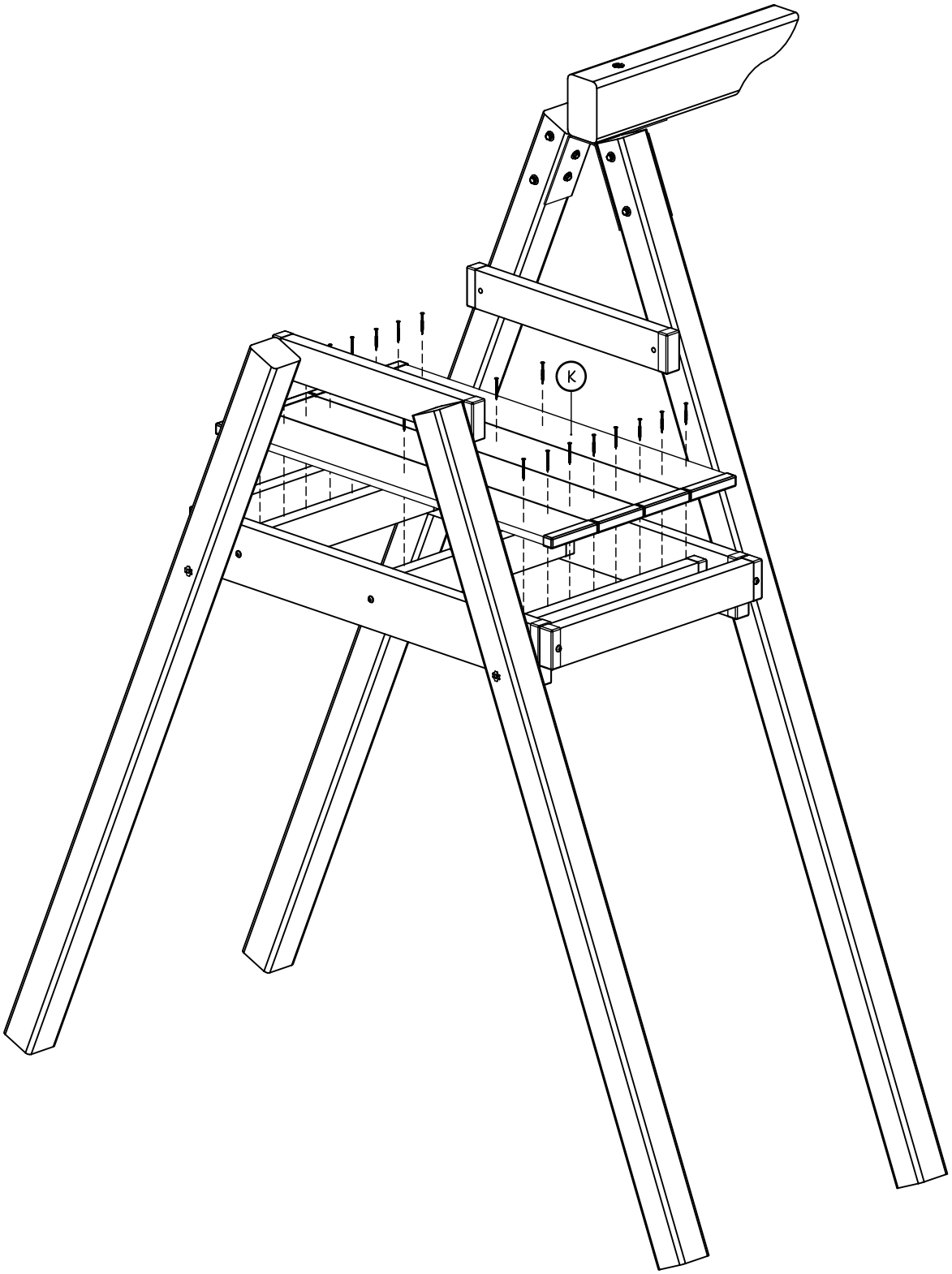

# PHASE 14

# WALL SLAT ATTACHMENT

| TABLE 14 - PARTS AND HARDWARE | | |
|---|---|---|
| ID LETTER | DESCRIPTION | QTY |
| M | WALL SLAT | 14 |
| | #8 x 2 1/2" DECK SCREW | 28 |

STEP 1: Gather parts and hardware shown in table 14.

STEP 2: Using a drill with Ø1/8" drill bit, drill a (6) pilot hole 1" deep into wall rail as shown ***Detail - 25***.

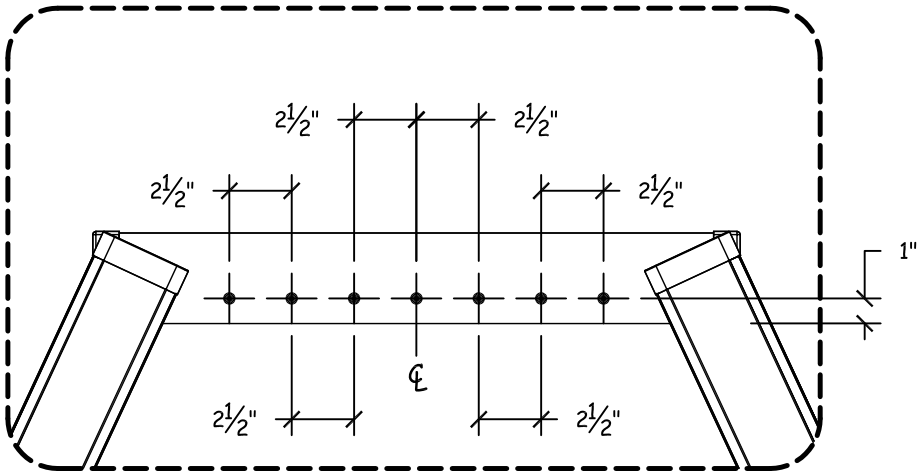


Detail - 25

STEP 3: Attach wall slat 'M' to wall rail 'J' and floor cap 'D1' with #8 x 2 1/2" deck screw. as shown ***Detail - 26***.

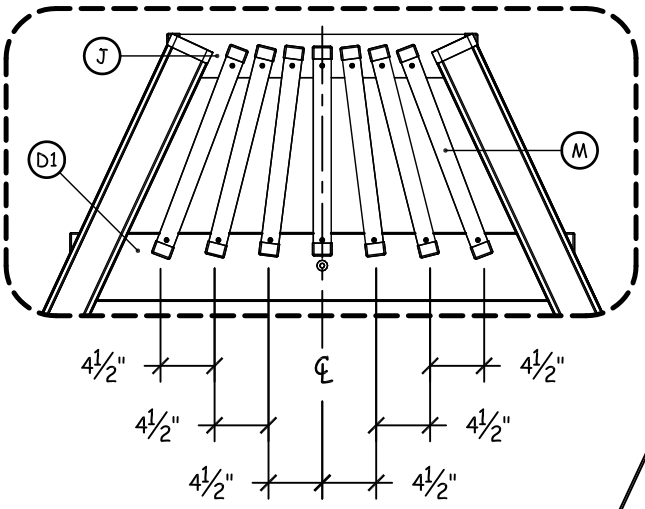


Detail - 26

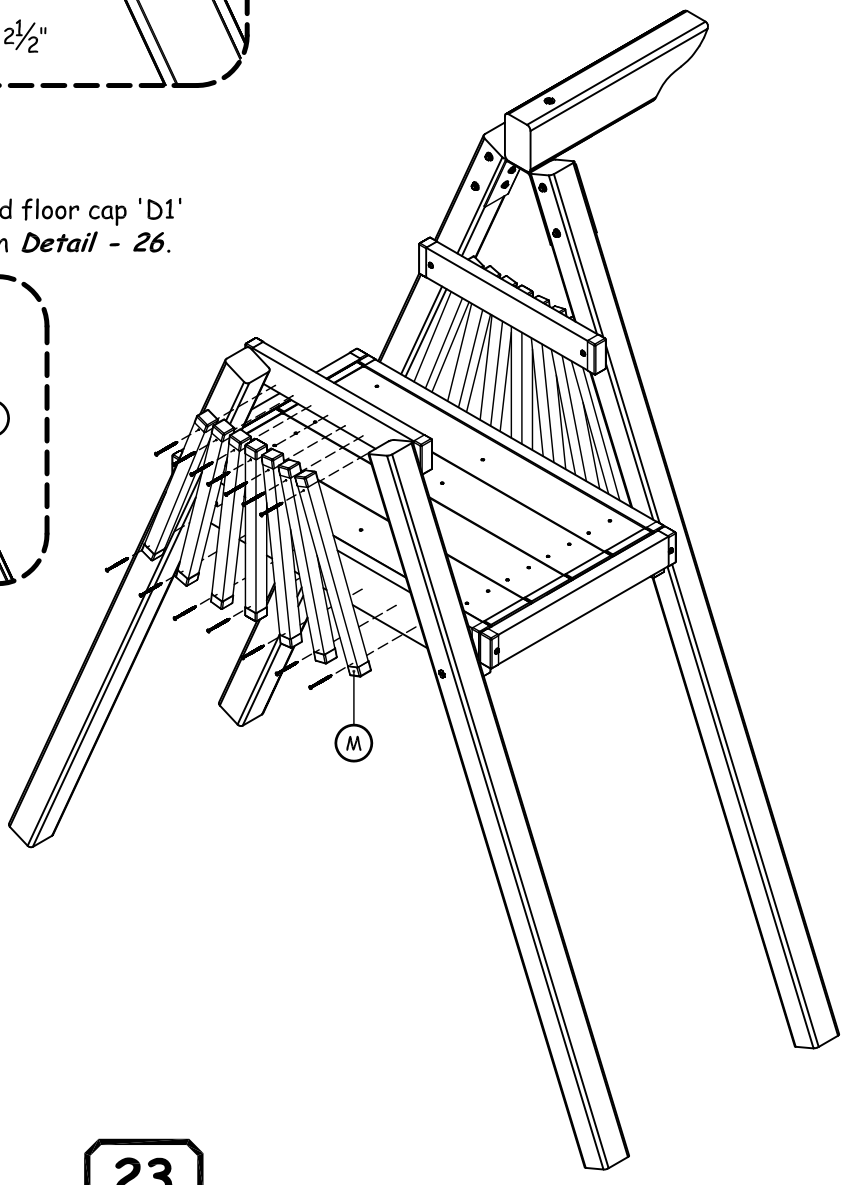

# PHASE 15

# LADDER ATTACHMENT

| TABLE 15 - PARTS AND HARDWARE | | |
|---|---|---|
| ID LETTER | DESCRIPTION | QTY |
| F | LADDER BOARD | 6 |
| | Ø5/16" x 3 1/8" RSS SCREW | 12 |

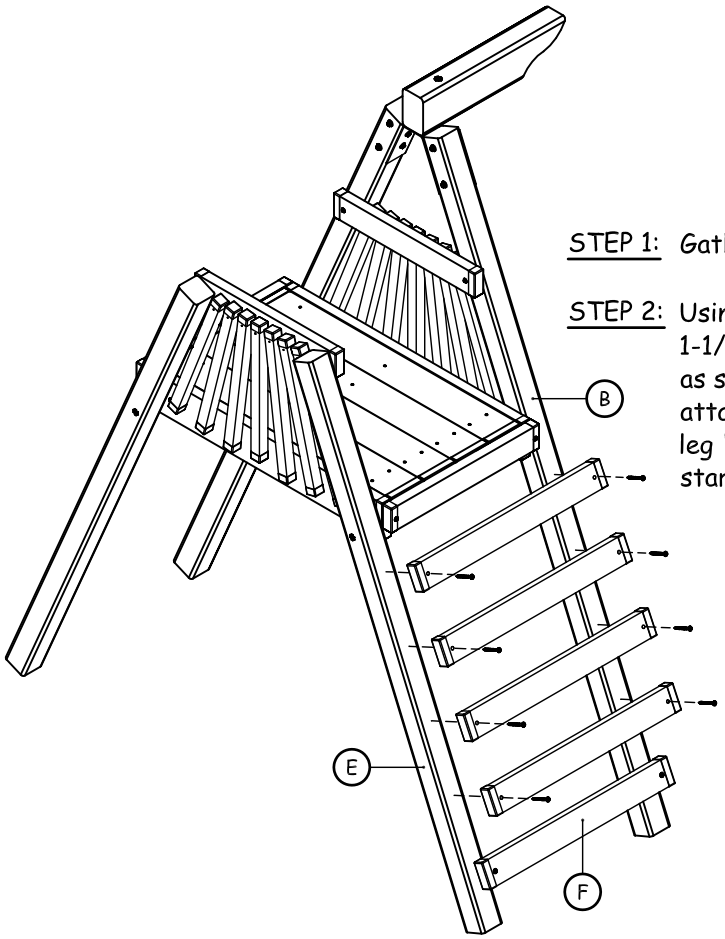


STEP 1: Gather parts and hardware shown in table 15.

STEP 2: Using a drill with Ø3/16" drill bit, drill a pilot hole 1-1/2" deep into deck upright and a-frame leg as shown ***Detail- 27***.
attach ladder board 'F' to deck upright 'B' and a-frame leg 'E' with Ø5/16" x 3 1/8" rss screw using supplied star drive.

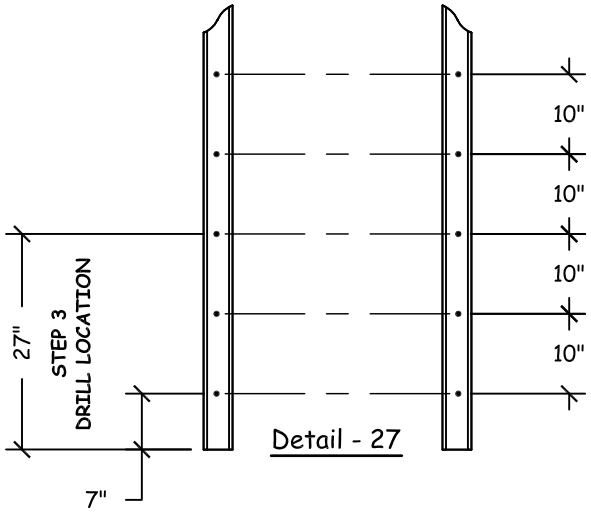


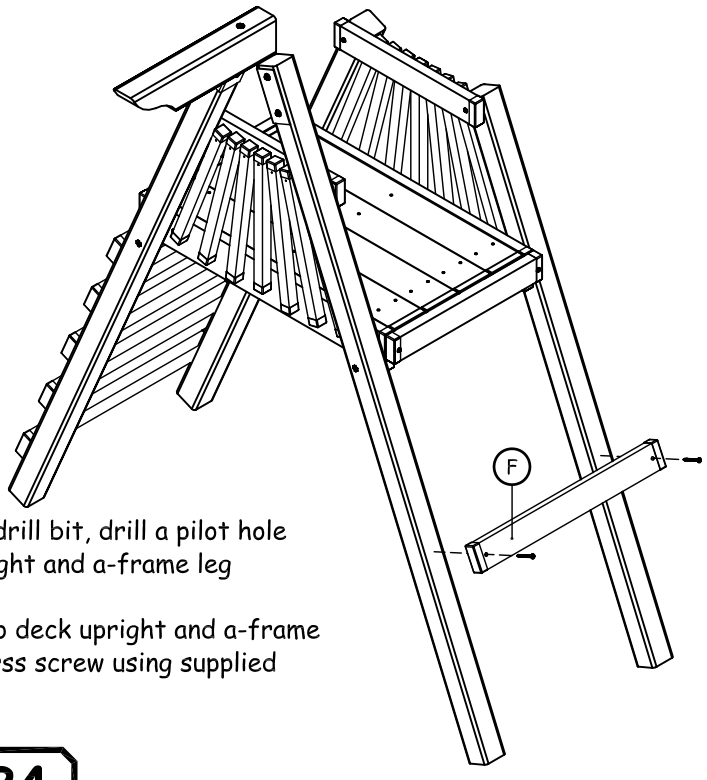


STEP 3: Using a drill with Ø3/16" drill bit, drill a pilot hole 1 1/2" deep into deck upright and a-frame leg as shown ***Detail - 27***.
attach ladder board "F" to deck upright and a-frame leg with Ø5/16" x 3 1/8" rss screw using supplied star drive.

# PHASE 16

## END CAP AND HAND GRIP ATTACHMENT

| TABLE 16 - PARTS AND HARDWARE | | |
|---|---|---|
| ID LETTER | DESCRIPTION | QTY |
| I | END CAP | 6 |
| | #8 x 3" DECK SCREW | 5 |
| | PLASTIC HAND GRIP (Pair) | 1 |
| | #8 x 1 1/2" PAN HEAD SCREW | 4 |
| | Ø5/16" SPLIT WASHER | 4 |

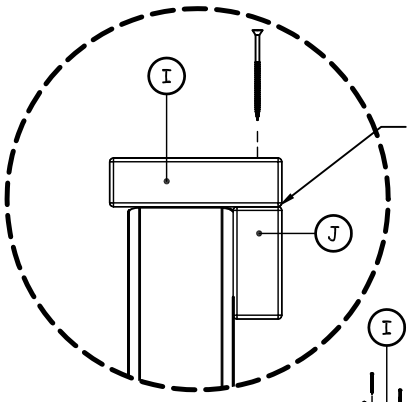


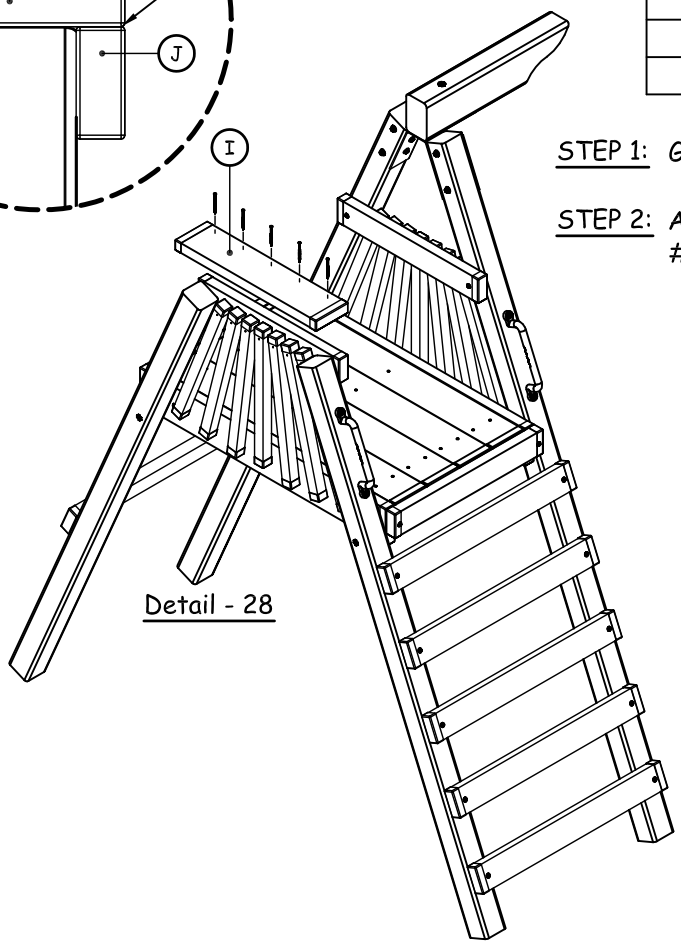


Detail - 28

STEP 1: Gather parts and hardware shown in table 16.

STEP 2: Attach end cap 'I' to wall rail 'J' with #8 x 3" deck screw as shown ***Detail - 28***.

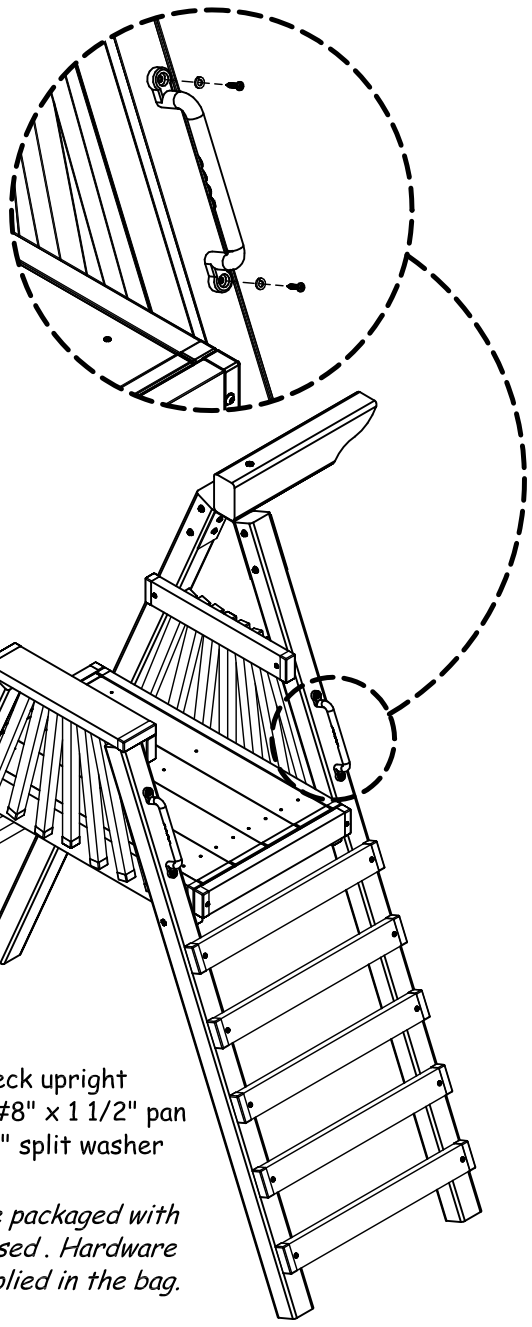

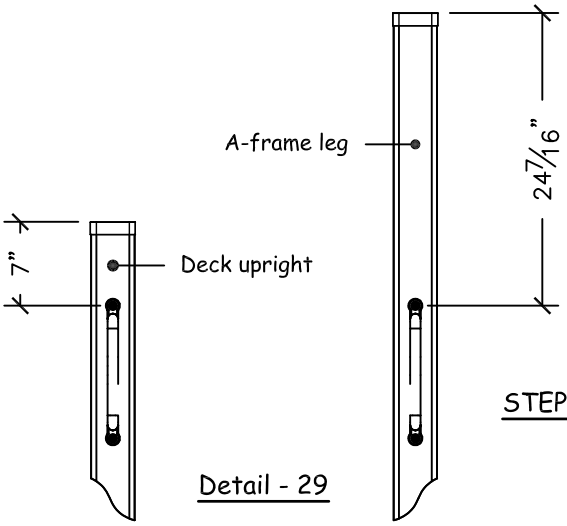


Detail - 29

STEP 3: Attach hand grip to deck upright and a-frame leg with #8" x 1 1/2" pan head screw and Ø5/16" split washer as shown ***Detail - 29***.

*NOTE: Hardware that may be packaged with hand grip will not be used . Hardware for attachment is supplied in the bag.*

# PHASE 17

# SLIDE ATTACHMENT

STEP 1: Gather parts and hardware shown in table 17.

| TABLE 17 - PARTS AND HARDWARE | | |
|---|---|---|
| ID LETTER | DESCRIPTION | QTY |
| | SLIDE | 1 |
| | #12 x 1" PAN HEAD SCREW | 3 |

***NOTE:*** *When installing a board on the small face of a 2x4, pre-drilling the attachment hole is* ***REQUIRED.*** *Center slide in the opening by using the holes in the slide as a guide., drill hole into 2x4 floor cap 'G' with Ø1/8" drill bit 1" deep.*

***FAILURE TO PRE-DRILL MAY RESULT IN BOARD SPLITTING***

STEP 2: Attach slide to floor deck with #12 x 1" pan head screw as shown ***Detail - 30***.

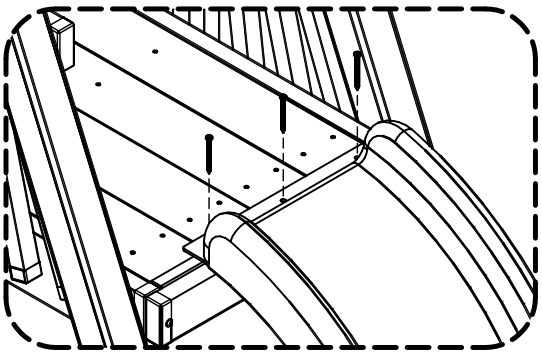

Detail - 30

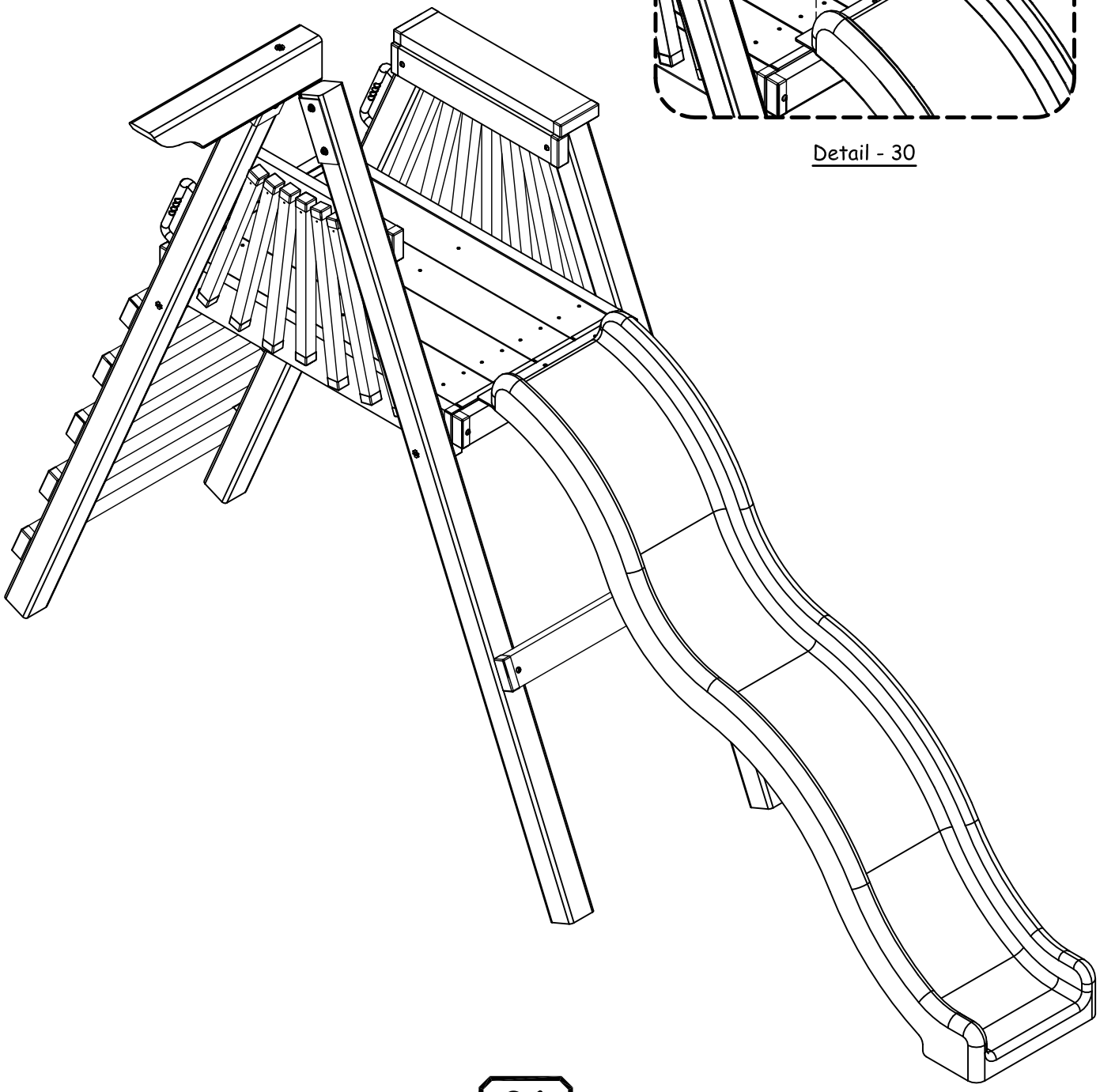

# PHASE 18

# ANCHORING INSTRUCTION

| TABLE 18 - PARTS AND HARDWARE | | |
|---|---|---|
| ID LETTER | DESCRIPTION | QTY |
| | WOOD STAKE | 7 |
| | 3" DECK SCREW | 14 |

STEP 1: Gather parts and hardware shown in table 18.

STEP 2: Drive the stakes into ground where shown below and attach with 3" deck screw.

## Failure to use stakes can void warranty, cause injury.

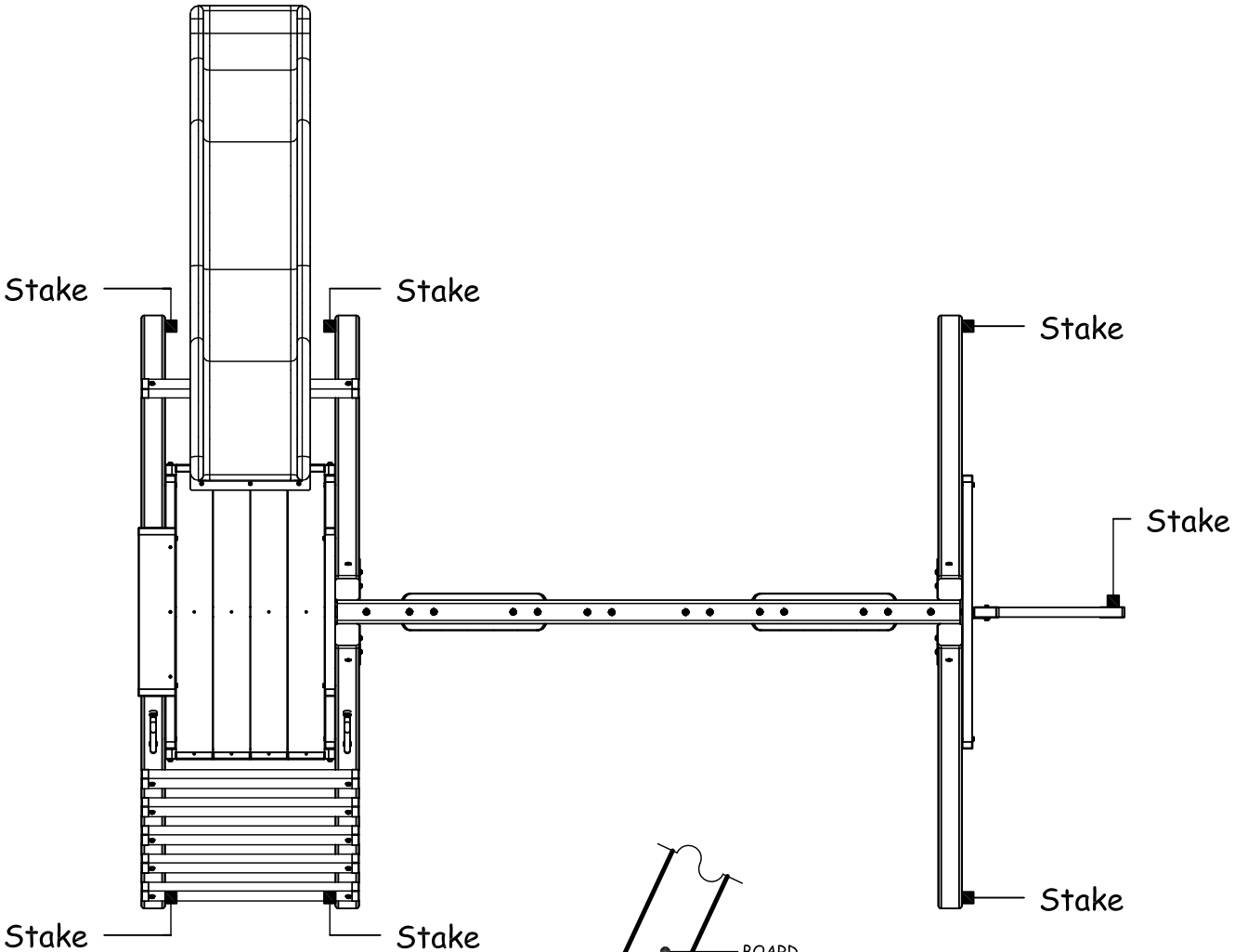


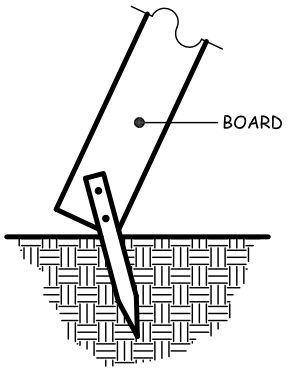


Stake must be located as shown

Final Step: Double check and make sure every bolt, screw and nut is tight,every board is secure and enjoy.

# CUSTOMER NOTES

FOR ANY QUESTION CALL:
909-522-4874

Monday - Friday: 8:00am - 3:00pm
Pacific Daylight Time